Bearing-types for Groschopp AC- und DC- motors

VE31-GR5/ GL5

up to 15Nm

modern, smooth compact-gearbox

Worm wheel gearboxes - single reduction

flange-version
ratios from 5:1 to 75:1 possible
increased efficiency
increased load capacity
low-noise version
O-ring-seal
modern, „new power generation"- Design

The worm wheel gearbox VE31 is part of the VARIO-gearbox-series and has proven itself to be very well received in the market. The VARIO series is characteristic of its modular composition. This enables easy adaption to the desired application.

Additionally the VARIO-system can adjust according to your preferences, to realise custom-made products. Therefore we also sell stainless steel versions. Hereby we do not only accomplish an innovative solution, but also an optimal price-efficiency.

It was also possible to simultaneously keep backward compatibility to already installed Groschopp gearboxes.

The load capacity was optimized and the efficiency significantly improved.

Certifications

CE

BRETZEL GmbH · Antriebs- und Elektrotechnik
Am Rotböll 8 · 64331 Weiterstadt · Telefax 0 61 50 / 8 65 60 - 69
www.bretzel-gmbh.de · info@bretzel-gmbh.de

Any questions concerning this product?
Please give us a call:
Telephone 0 61 50 / 8 65 60 - 0

drawings VE31-GR5

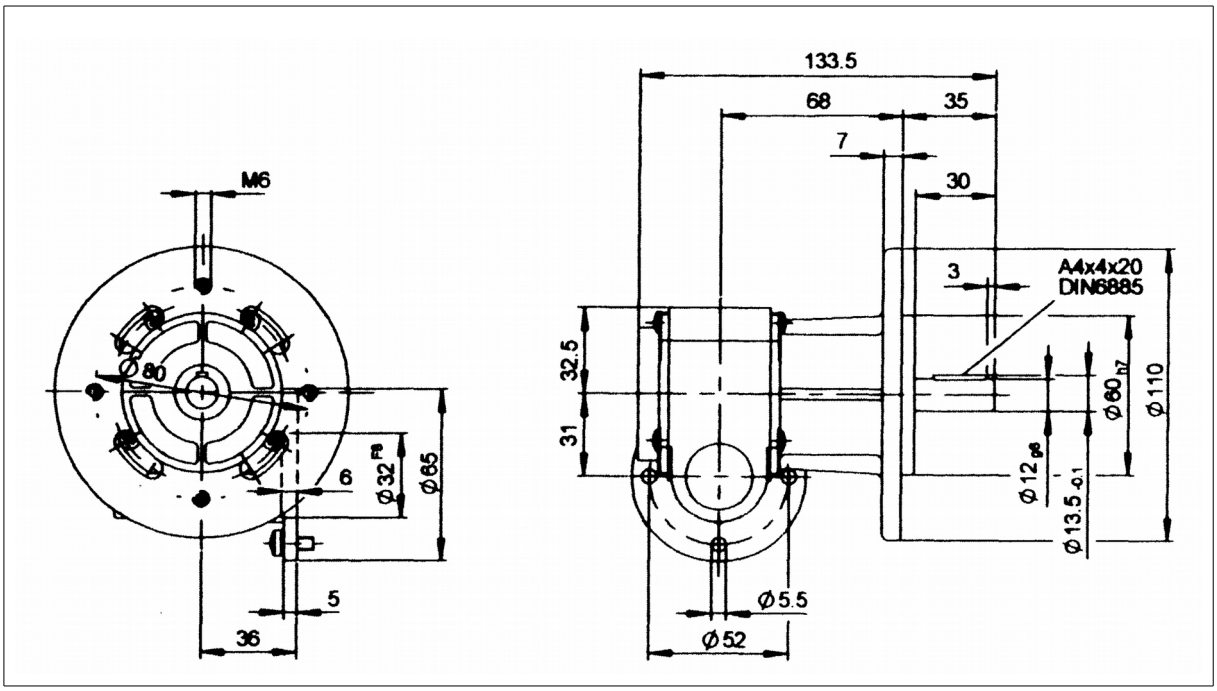

drawings VE31-GL5

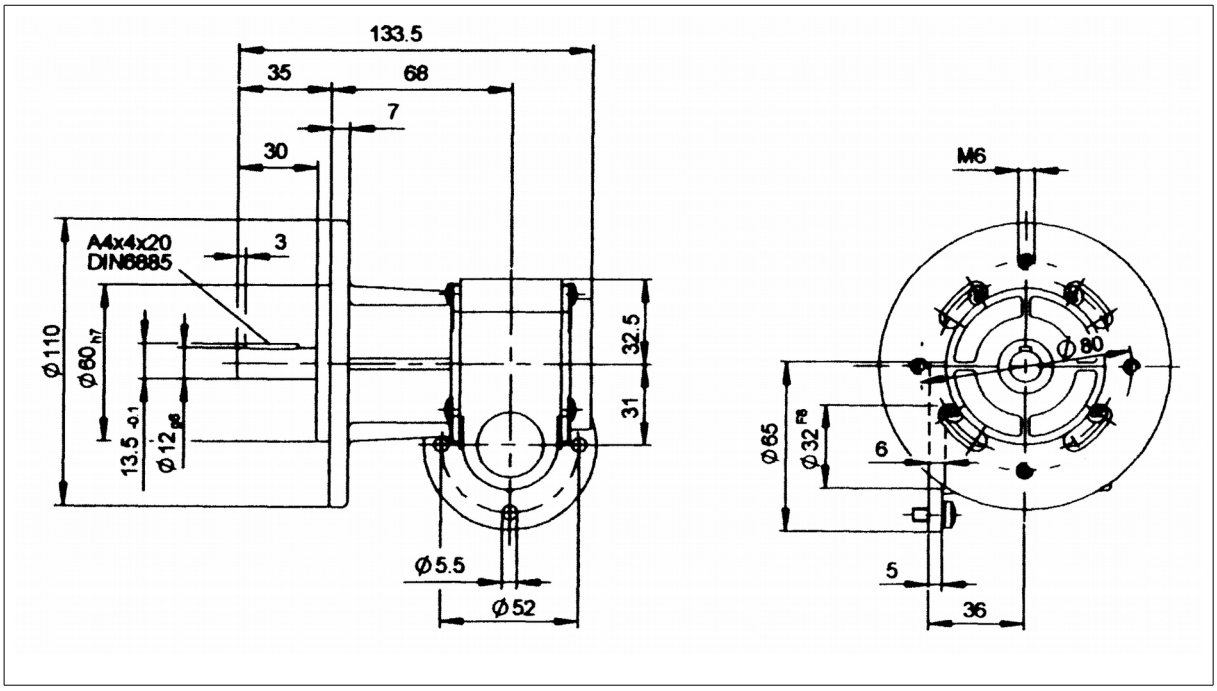

BRETZEL GmbH · Antriebs- und Elektrotechnik
Am Rotböll 8 · 64331 Weiterstadt · Telefax 0 61 50 / 8 65 60 - 69
www.bretzel-gmbh.de · info@bretzel-gmbh.de

Any questions concerning this product?
Please give us a call:
Telephone 0 61 50 / 8 65 60 - 0

Available ratios/ nominal torque

draw types

Gear ratios	i	5:1	7:1	10:1	15:1	22:1	30:1	38:1	55:1	75:1
M_{dmax}, operation mode: S1 *)	[Nm]	12	13	12	14	12	13	15	13	10
M_{dmax}, operation mode: S3 **)	[Nm]	24	25	24	28	24	25	26	25	22
M_{dmax}, reinforced, S1 **)	[Nm]	20	21	20	24	20	21	22	21	18

assembly types

Gear ratios	i	12:1	18:1	20:1	24:1	25:1	50:1
M_{dmax}, operation mode: S1 *)	[Nm]	16	13	13	12	12	12
M_{dmax}, operation mode: S3 **)	[Nm]	28	25	25	24	24	24
M_{dmax}, reinforced: S1 **)	[Nm]	26	21	21	20	20	20

Specified values apply for synthetic lubricants (price premium). The standard lubricant is grease on mineral oil-basis (Efficiency loss about 5%).

*) *The specified values for M_{dmax} apply for a non reserved, shock-free operation. The Life expectancy is about 6000h.*
**) For Applications, which enter the scope S3 and S1*, there is a reinforced version required (price premium). The life-expectancy is reduced to 3000h.

technical data

maximum load of the drive shaft	**radial**	150N (at center of output shaft extension)
maximum load of the drive shaft	**axial**	100N
static self-locking*[1]		i=50, i=55, i=75
maximum thermal dissipation (continuous operation)	37 W	
weight	ca. 1,1 kg	
material of worm wheel	bronze	

efficiency factor

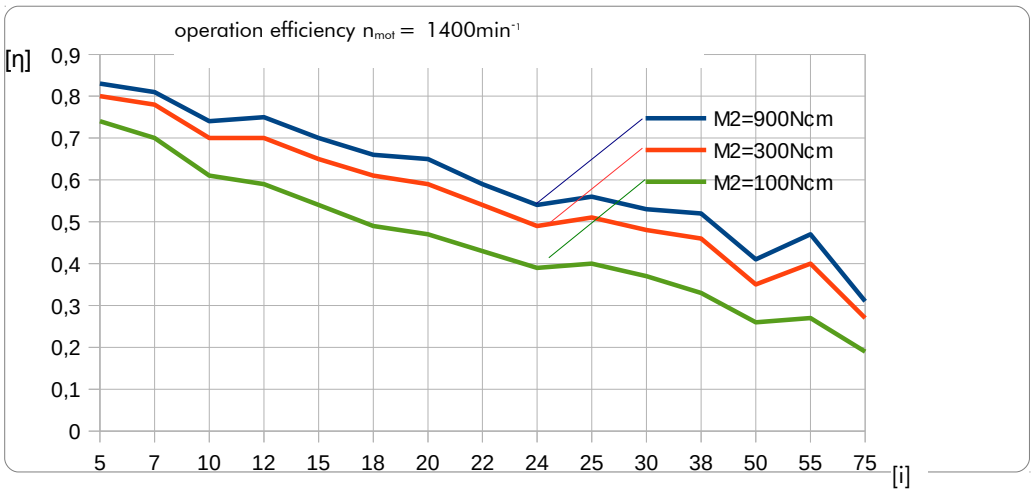

BRETZEL GmbH · Antriebs- und Elektrotechnik
Am Rotböll 8 · 64331 Weiterstadt · Telefax 0 61 50 / 8 65 60 - 69
www.bretzel-gmbh.de · info@bretzel-gmbh.de

Any questions concerning this product?
Please give us a call:
Telephone 0 61 50 / 8 65 60 - 0

*[1] self-locking

The self-locking is being influenced by the pitch angle, surface-roughness, shoul, sliding speed, and by the lubricant as well as the warming. There are dynamic and static self-locking, which two distinct forms of self-locking.

dynamic self-locking

pitch angle up to 3°	using grease
pitch angle up to 2,5°	using synthetic oils as lubricant

static self-locking

pitch angle from 3° to 5°	using grease
pitch angle from 2,5° to 4,5°	using synthetic oils as lubricant
pitch angle above 4,5° and 5° respectively	no self-locking

Shock or vibrations can stop self-locking from occurring. Furthermore several different factors connected to lubrication, sliding speed and load capacity can cause favorable sliding-properties, so that the self-locking is negatively influenced. This is the reason, why we will not assume indemnity bonds concerning self-locking.

BRETZEL GmbH · Antriebs- und Elektrotechnik
Am Rotböll 8 · 64331 Weiterstadt · Telefax 0 61 50 / 8 65 60 - 69
www.bretzel-gmbh.de · info@bretzel-gmbh.de

Any questions concerning this product?
Please give us a call:
Telephone 0 61 50 / 8 65 60 - 0