Typ SLC

1100 Nm

efficient worm wheel gearboxes

- ideal to add additional servomotors
- drive end with square flange
- high efficiency
- ratios: i = 5:1 to 26:1 (i > 26 on demand)
- acceleration torque up to T2B = 1100 Nm
- minimized circumferential backlash
- maximized torque stiffness
- 5 gearbox sizes from 040 to 100 mm centre distance
- gear speed up to n1 = 6.800 min^{-1}

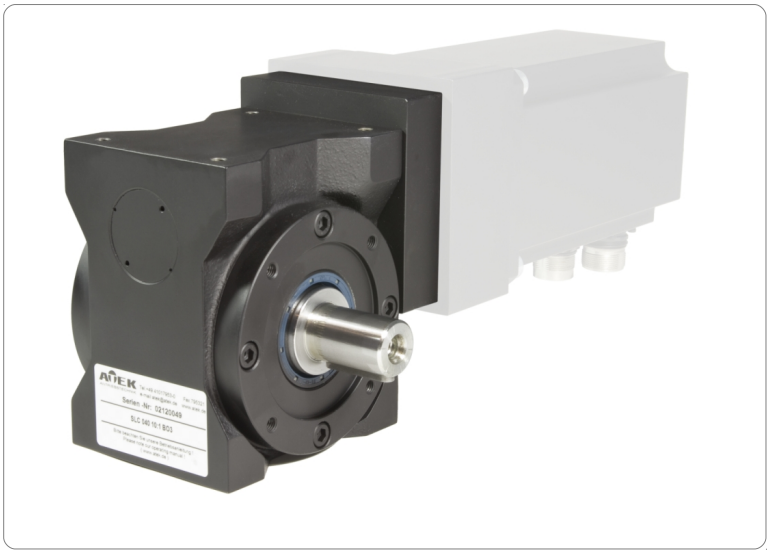

Certifications

CE

BRETZEL GmbH · Antriebs- und Elektrotechnik
Am Rotböll 8 · 64331 Weiterstadt · Telefax 0 61 50 / 8 65 60 - 69
www.bretzel-gmbh.de · info@bretzel-gmbh.de

Any questions concerning this product?
Please give us a call:
Telephone 0 61 50 / 8 65 60 - 0

This data sheet was prepared with care. Despite careful examination of all data contained in the catalog, we assume no liability for incorrect or incomplete data.

Models

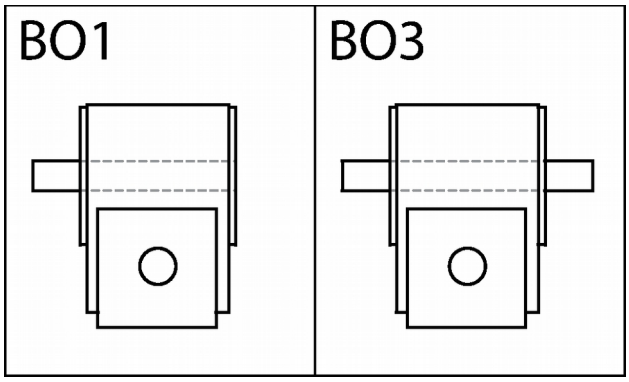

The models BO1 and BO3 have a single- or double sided drive shaft with key or as smooth shaft end

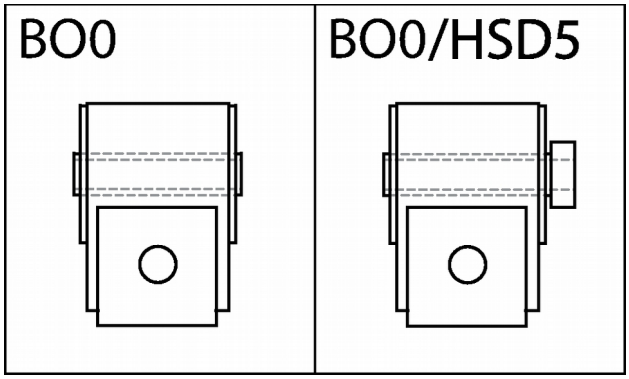

The model BO0 has one persistent hollow shaft. This enables the following implementations:

- with or without slot
- splined hub profile
- polygon profile

For the model BO0/HSD5 a hollow shaft is used and a shrink disc is required for force fit torque transmission. The drive side is provided with a bronze connector.

BRETZEL GmbH · Antriebs- und Elektrotechnik
Am Rotböll 8 · 64331 Weiterstadt · Telefax 0 61 50 / 8 65 60 - 69
www.bretzel-gmbh.de · info@bretzel-gmbh.de

Any questions concerning this product?
Please give us a call:
Telephone 0 61 50 / 8 65 60 - 0

This data sheet was prepared with care. Despite careful examination of all data contained in the catalog, we assume no liability for incorrect or incomplete data.

Dimensions

Type SLC040

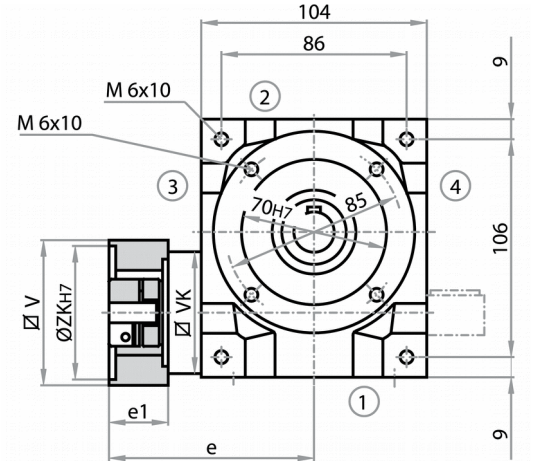

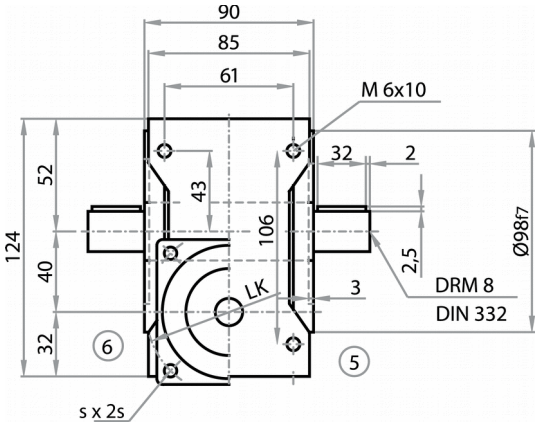

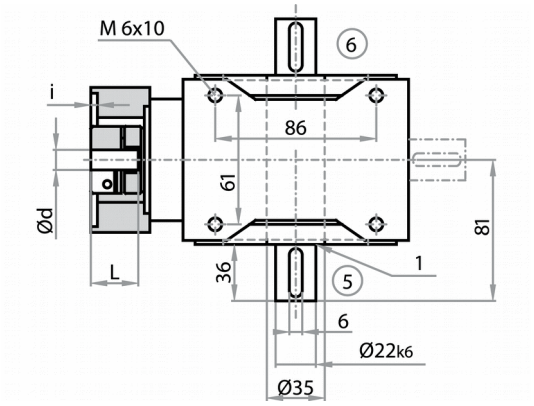

Model

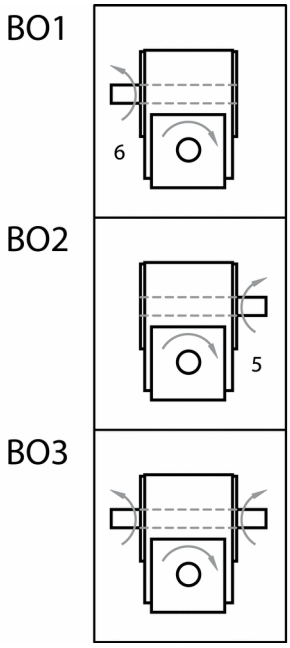

BRETZEL GmbH · Antriebs- und Elektrotechnik
Am Rotböll 8 · 64331 Weiterstadt · Telefax 0 61 50 / 8 65 60 - 69
www.bretzel-gmbh.de · info@bretzel-gmbh.de

Any questions concerning this product?
Please give us a call:
Telephone 0 61 50 / 8 65 60 - 0

This data sheet was prepared with care. Despite careful examination of all data contained in the catalog, we assume no liability for incorrect or incomplete data.

Hollow shaft version

standard / HKW

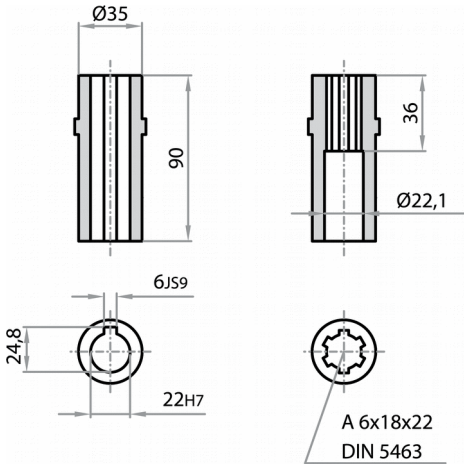

HSD

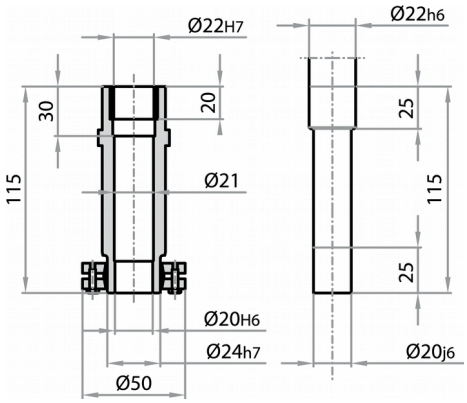

Model

BO0

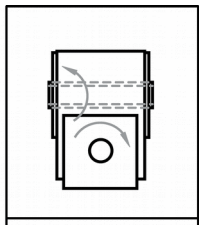

BO0/HSD5

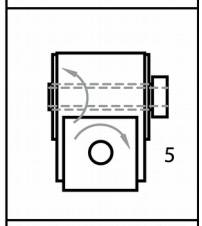

BO0/HSD6

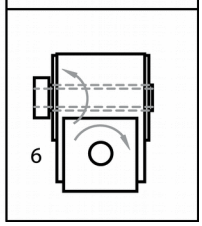

fastening flange/ -base

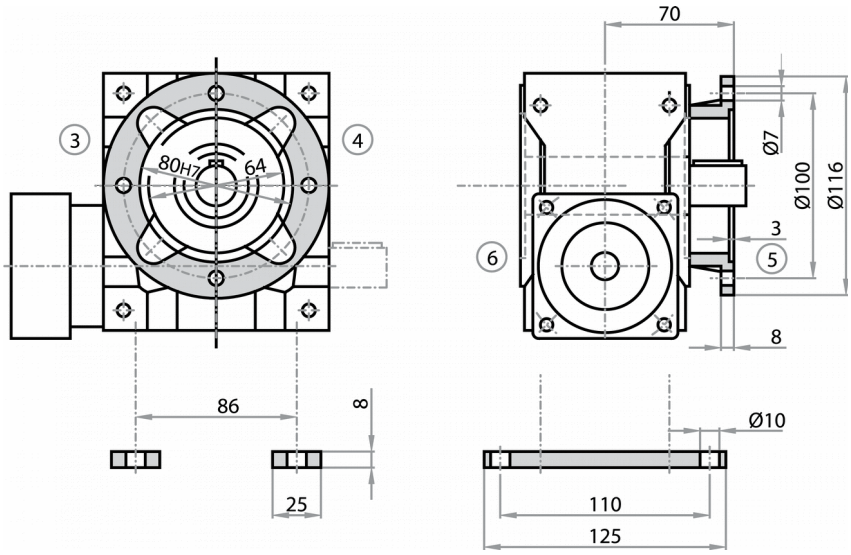

F..

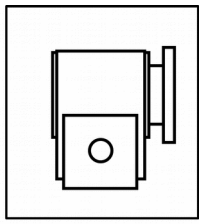

G..

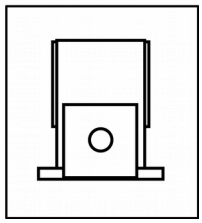

BRETZEL GmbH · Antriebs- und Elektrotechnik
Am Rotböll 8 · 64331 Weiterstadt · Telefax 0 61 50 / 8 65 60 - 69
www.bretzel-gmbh.de · info@bretzel-gmbh.de

Any questions concerning this product?
Please give us a call:
Telephone 0 61 50 / 8 65 60 - 0

This data sheet was prepared with care. Despite careful examination of all data contained in the catalog, we assume no liability for incorrect or incomplete data.

Typ SLC050

Model

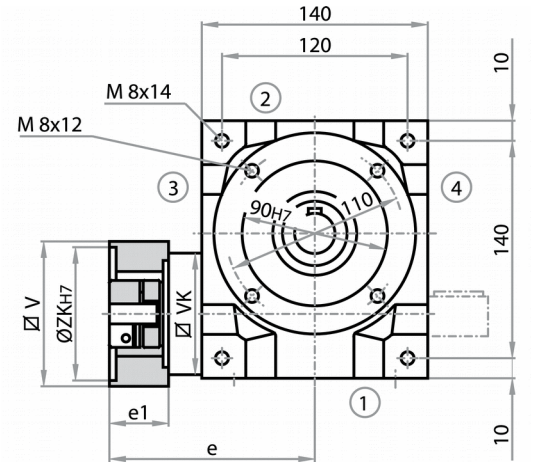

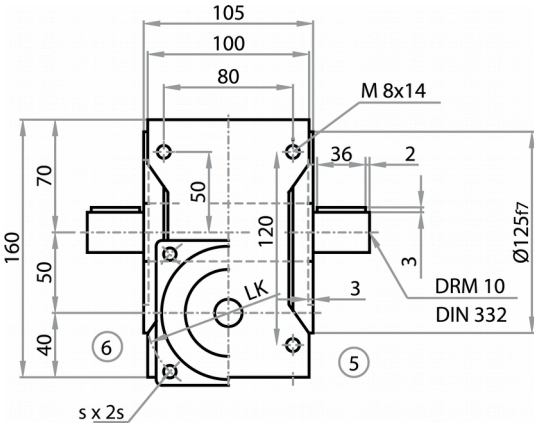

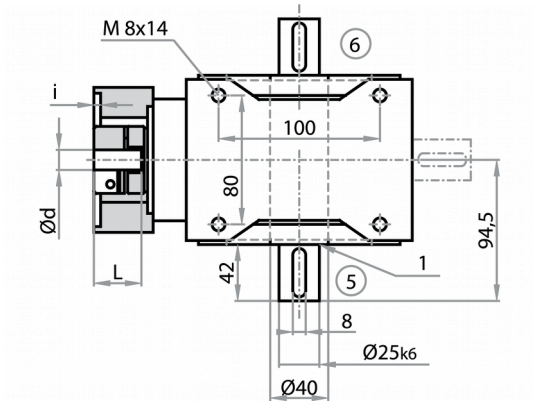

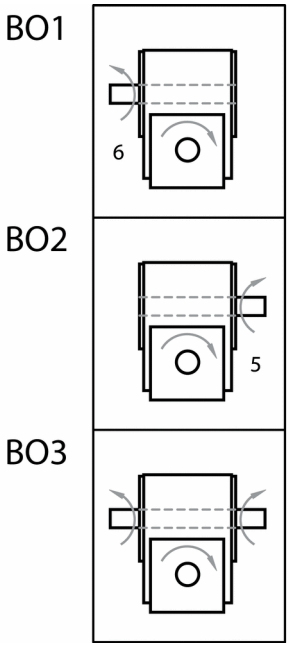

BRETZEL GmbH · Antriebs- und Elektrotechnik
Am Rotböll 8 · 64331 Weiterstadt · Telefax 0 61 50 / 8 65 60 - 69
www.bretzel-gmbh.de · info@bretzel-gmbh.de

Any questions concerning this product?
Please give us a call:
Telephone 0 61 50 / 8 65 60 - 0

This data sheet was prepared with care. Despite careful examination of all data contained in the catalog, we assume no liability for incorrect or incomplete data.

Hollow shaft version

Model

Standard / HKW

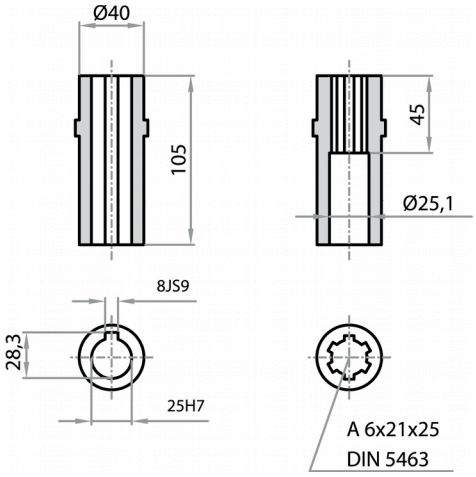

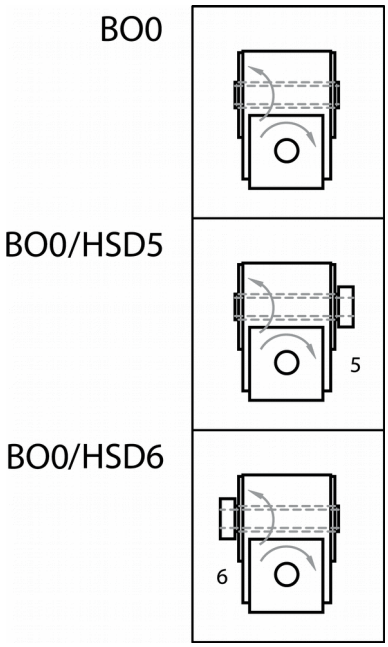

HSD

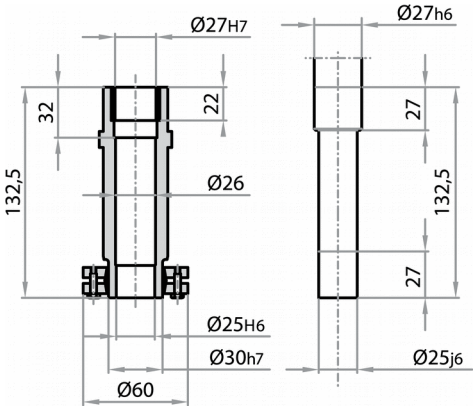

fastening flange/ -base

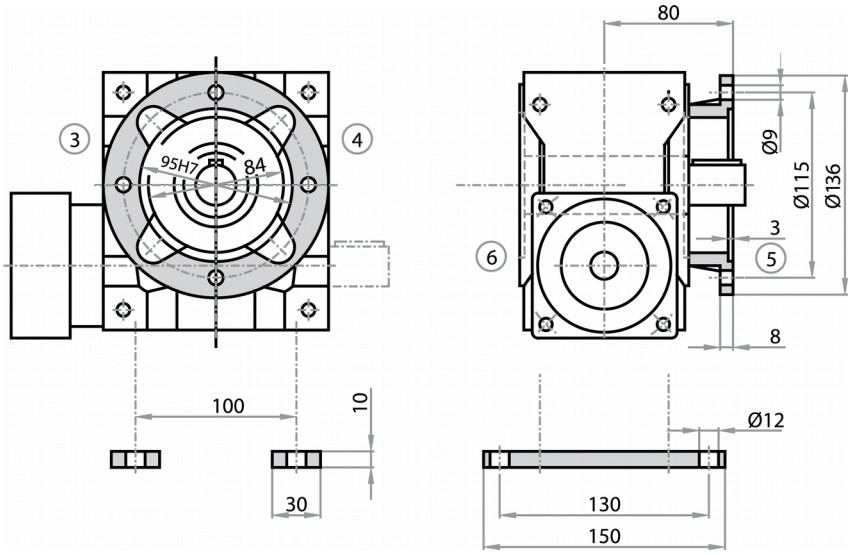

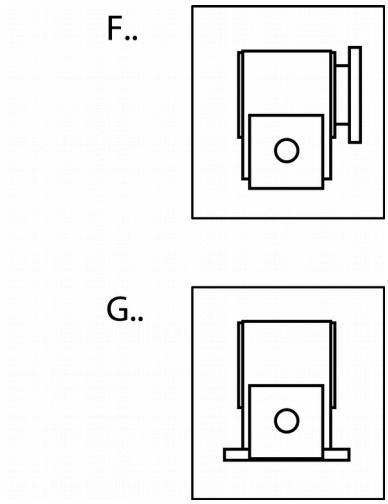

BRETZEL GmbH · Antriebs- und Elektrotechnik
Am Rotböll 8 · 64331 Weiterstadt · Telefax 0 61 50 / 8 65 60 - 69
www.bretzel-gmbh.de · info@bretzel-gmbh.de

Any questions concerning this product?
Please give us a call:
Telephone 0 61 50 / 8 65 60 - 0

This data sheet was prepared with care. Despite careful examination of all data contained in the catalog, we assume no liability for incorrect or incomplete data.

Typ SLC063

Model

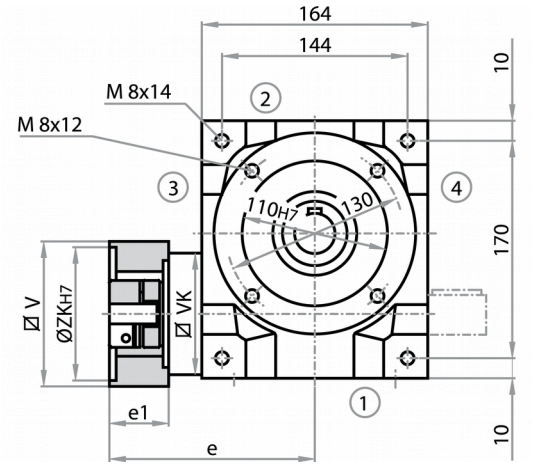

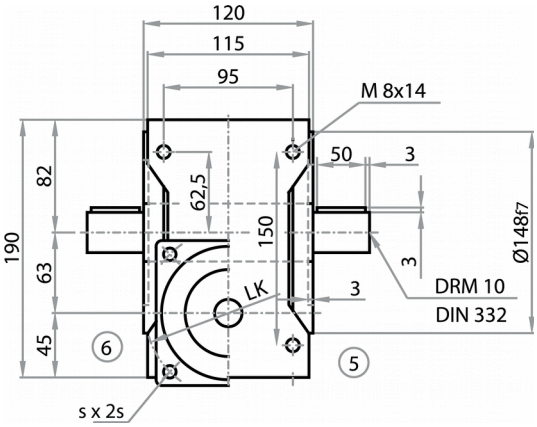

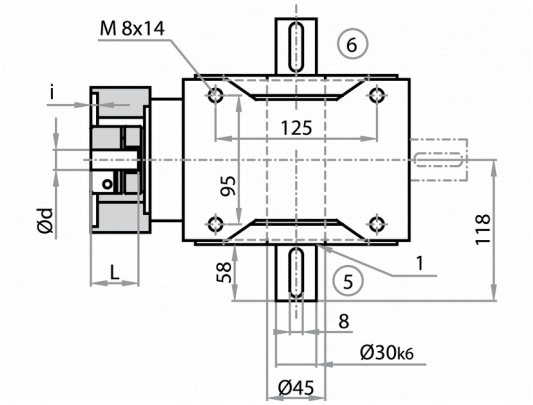

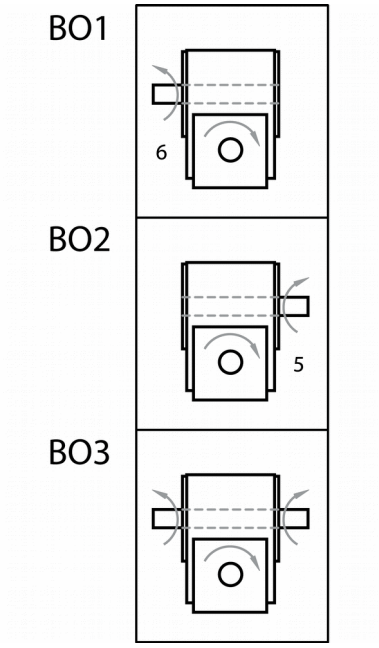

BRETZEL GmbH · Antriebs- und Elektrotechnik
Am Rotböll 8 · 64331 Weiterstadt · Telefax 0 61 50 / 8 65 60 - 69
www.bretzel-gmbh.de · info@bretzel-gmbh.de

Any questions concerning this product?
Please give us a call:
Telephone 0 61 50 / 8 65 60 - 0

This data sheet was prepared with care. Despite careful examination of all data contained in the catalog, we assume no liability for incorrect or incomplete data.

Hollow shaft version

standard / HKW

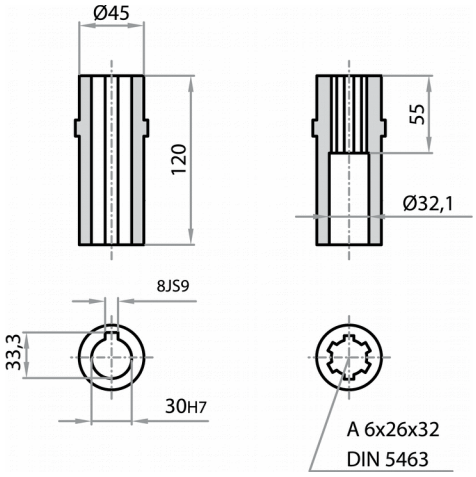

HSD

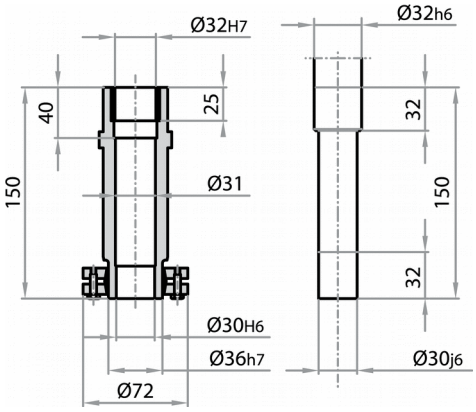

Model

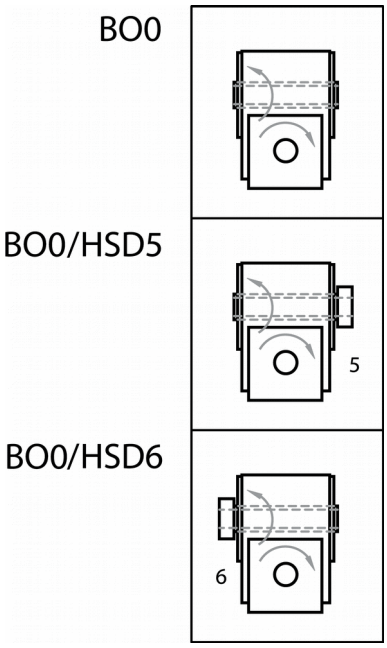

fastening flange/ -base

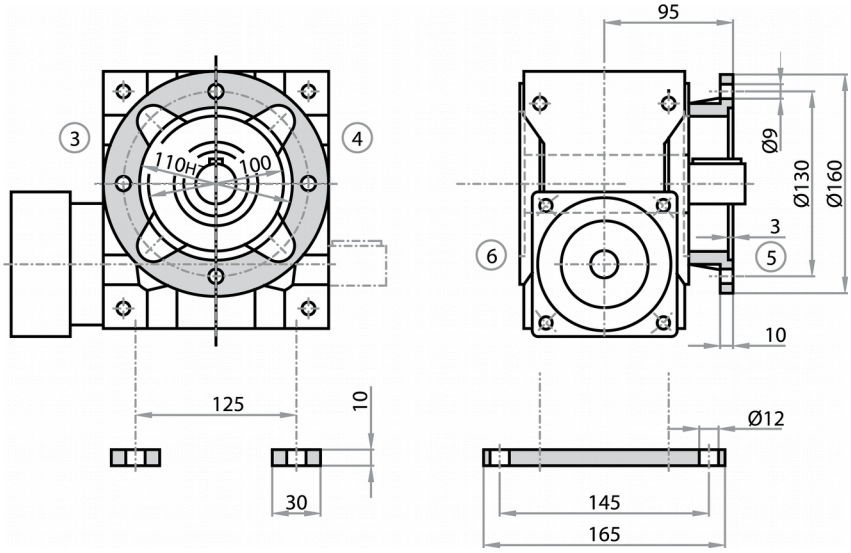

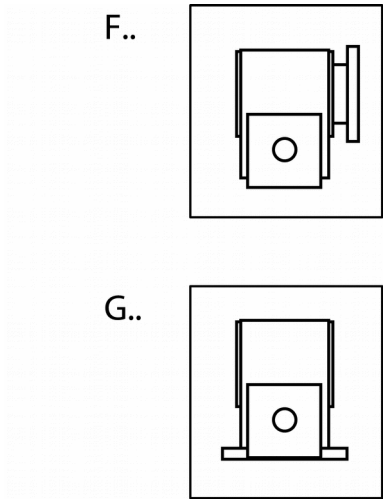

BRETZEL GmbH · Antriebs- und Elektrotechnik
Am Rotböll 8 · 64331 Weiterstadt · Telefax 0 61 50 / 8 65 60 - 69
www.bretzel-gmbh.de · info@bretzel-gmbh.de

Any questions concerning this product?
Please give us a call:
Telephone 0 61 50 / 8 65 60 - 0

This data sheet was prepared with care. Despite careful examination of all data contained in the catalog, we assume no liability for incorrect or incomplete data.

Technical Data

Power, Torque, Efficiency

Gear ratio	Input speed 3000 Output speed min⁻¹	3000 Torque Nm	3000 Efficiency	1500 Output speed min⁻¹	1500 Torque Nm	1500 Efficiency	2400 Output Speed min⁻¹	2400 Torque Nm	4000 Output speed min⁻¹	4000 Torque Nm	Acceleration torque Nm	Emergency stop torque Nm	Maximum output speed min⁻¹
SLC040													
5:1	621	28	0,94	310	37	0,94	497	33	828	23	53	73	6000
7,5:1	414	32	0,92	207	41	0,91	331	37	552	27	58	83	6000
10:1	308	37	0,91	154	48	0,90	246	42	421	32	50	77	6000
13:1	231	31	0,88	115	33	0,87	185	32	314	30	39	59	6000
15:1	207	35	0,86	103	44	0,84	166	40	276	30	63	97	6000
20:1	154	41	0,84	77	51	0,82	123	46	211	36	58	90	6500
26:1	115	37	0,80	58	39	0,78	92	38	157	36	45	77	6800
30:1	100	36	0,75	50	50	0,73							
40:1	75	44	0,46	37	56	0,70							
53:1	57	44	0,68	28	48	0,65							
62:1	48	45	0,63	24	48	0,59							
83:1	36	36	0,56	18	37	0,52							
SLC050													
5:1	621	60	0,96	310	83	0,95	828	48	497	72	125	150	5000
7,5:1	414	71	0,94	207	94	0,93	552	59	331	82	125	167	5000
10:1	316	83	0,93	158	110	0,92	421	70	253	97	112	152	5500
13:1	235	56	0,90	118	60	0,89	314	54	188	58	66	100	5800
15:1	207	76	0,88	103	105	0,87	276	62	166	91	145	195	5000
20:1	158	85	0,87	79	111	0,85	211	72	126	98	133	179	5500
26:1	118	73	0,84	59	77	0,81	157	70	94	75	86	137	5800
30:1	100	82	0,79	50	113	0,77							
40:1	75	80	0,76	37	118	0,75							
53:1	57	77	0,73	28	85	0,69							
62:1	48	81	0,67	24	105	0,64							
83:1	36	59	0,58	18	63	0,56							

BRETZEL GmbH · Antriebs- und Elektrotechnik
Am Rotböll 8 · 64331 Weiterstadt · Telefax 0 61 50 / 8 65 60 - 69
www.bretzel-gmbh.de · info@bretzel-gmbh.de

Any questions concerning this product?
Please give us a call:
Telephone 0 61 50 / 8 65 60 - 0

This data sheet was prepared with care. Despite careful examination of all data contained in the catalog, we assume no liability for incorrect or incomplete data.

Gear ratio	Input speed 3000 Output speed min⁻¹	3000 torque Nm	3000 Efficiency	1500 Output speed min⁻¹	1500 torque Nm	1500 efficiency	2400 Output speed min⁻¹	2400 torque Nm	4000 Output speed min⁻¹	4000 torque Nm	Acceleration torque Nm	Emergency stop torque Nm	Maximum output speed min⁻¹
SLC063													
5:1	621	89	0,96	310	129	0,95	497	109	828	69	198	295	4500
7,5:1	414	104	0,94	207	146	0,94	331	125	552	83	223	334	4500
10:1	308	124	0,94	154	171	0,93	246	148	421	101	216	306	5000
13:1	235	128	0,93	115	138	0,92	188	133	314	123	151	222	5300
15:1	207	119	0,89	103	166	0,89	166	142	276	96	266	395	4500
20:1	154	141	0,88	77	190	0,88	123	166	211	116	259	355	5000
26:1	118	135	0,86	58	175	0,85	94	155	157	115	195	295	5300
30:1	100	143	0,80	50	204	0,80							
40:1	75	149	0,78	37	207	0,77							
53:1	57	143	0,76	28	191	0,74							
62:1	48	110	0,69	24	175	0,68							
83:1	36	129	0,66	18	152	0,63							

radial load

Gear type	T2 Nm	Maximum radial load 200min⁻¹ Nm	125min⁻¹	75min⁻¹	50min⁻¹	30min⁻¹	10min⁻¹
40	<80	970	1250	1380	1600	1800	2500
50	<120	2000	2400	2850	3350	4000	4800
	>120	1540	1850	2190	2580	3080	3750
63	<220	2700	3150	3800	4500	5200	5200
	>220	2080	2420	2920	3460	4000	4000

BRETZEL GmbH · Antriebs- und Elektrotechnik
Am Rotböll 8 · 64331 Weiterstadt · Telefax 0 61 50 / 8 65 60 - 69
www.bretzel-gmbh.de · info@bretzel-gmbh.de

Any questions concerning this product?
Please give us a call:
Telephone 0 61 50 / 8 65 60 - 0

This data sheet was prepared with care. Despite careful examination of all data contained in the catalog, we assume no liability for incorrect or incomplete data.

Accelerations- and emergency stop torque of the coupling version

Diameter of motor shaft	KN → clamping hub smooth		KNN →motor shaft with key SN → clamping ring hub		Gear type
	Acceleration torque	Emergency stop torque	Acceleration torque	Emergency stop torque	
mm	Nm				
GS14					
9	5,3	7	10	22	SLC040
11	5,6	9	10	25	
14	6,1	13	10	25	
16	6,5	15	10	25	
GS19					
9	17	30	-	-	SLC040 SLC050 SLC063
11	17	30	17	30	
14	17	32	17	32	
16	17	32	17	34	
19	17	34	17	34	
24	17	34	-	-	
GS24					
11	35	45	48	-	SLC050 SLC063
14	36	45	48	80	
16	39	50	48	100	
19	39	60	48	120	
24	43	65	48	120	
28	46	70	48	120	

Moments of inertia

Type	gearbox							couplings						Mass
	Gear ratio							GS14		GS19		GS24		
	5:1	7,5:1	10:1	13:1	15:1	20:1	26:1	KN/KNN	SN	KN/KNN	SN	KN/KNN	SN	
	J (kgm²)													kg
SLC040	0,3307	0,2454	0,1801	0,1458	0,1943	0,1476	0,1268	0,0606	0,1446	0,4229	0,6349	-	-	7
SLC050	0,9509	0,7327	0,5820	0,4876	0,6017	0,4996	0,4375	-	-	0,4229	0,6349	1,0910	2,7750	13
SLC063	2,1678	1,6423	1,1366	0,9368	1,3270	0,9445	0,8175	-	-	0,4229	0,6349	1,0910	2,7750	20

BRETZEL GmbH · Antriebs- und Elektrotechnik
Am Rotböll 8 · 64331 Weiterstadt · Telefax 0 61 50 / 8 65 60 - 69
www.bretzel-gmbh.de · info@bretzel-gmbh.de

Any questions concerning this product?
Please give us a call:
Telephone 0 61 50 / 8 65 60 - 0

This data sheet was prepared with care. Despite careful examination of all data contained in the catalog, we assume no liability for incorrect or incomplete data.

Mounting side

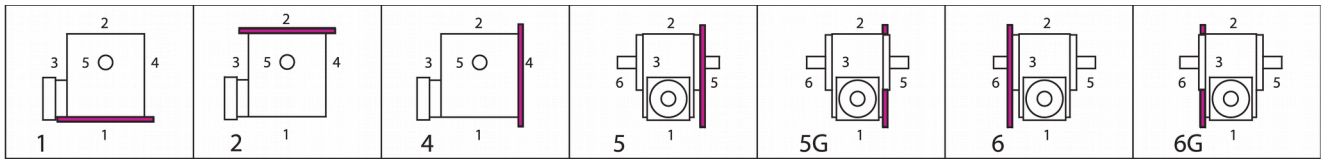

Mounting position

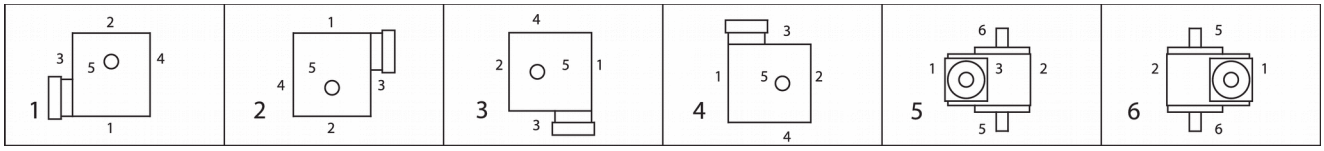

Example orders

Type	size	Gear ratio	Model	Mounting Side	Mounting position	max. output speed	Coupling
SLC	050	13:1	BO0/HSD5	1	1	3000min^{-1}	GS24 KN

BRETZEL GmbH · Antriebs- und Elektrotechnik
Am Rotböll 8 · 64331 Weiterstadt · Telefax 0 61 50 / 8 65 60 - 69
www.bretzel-gmbh.de · info@bretzel-gmbh.de

Any questions concerning this product?
Please give us a call:
Telephone 0 61 50 / 8 65 60 - 0

This data sheet was prepared with care. Despite careful examination of all data contained in the catalog, we assume no liability for incorrect or incomplete data.