BRETZEL GmbH
Antriebs- und Elektrotechnik
Am Rotböll 8
64331 Weiterstadt

www.bretzel-gmbh.de
info@bretzel-gmbh.de
Telefon: 0 61 50 / 8 65 60 - 0

CR700

The Crane Drive for Industrial Applications

Technical Data Sheet

Type: **CIPR-CR70Cxxxxxxxx-9700**

400 V Class, Three-Phase Input: 0.55 to 315 kW



Copyright © 2025 YASKAWA Europe GmbH
All rights reserved. No part of this publication may be reproduced, stored in a retrieval system, or transmitted, in any form or by any means, mechanical, electronic, photocopying, recording, or otherwise, without the prior written permission of Yaskawa. No patent liability is assumed with respect to the use of the information contained herein. Moreover, because Yaskawa is constantly striving to improve its high-quality products, the information contained in this manual is subject to change without notice. Every precaution has been taken in the preparation of this manual. Yaskawa assumes no responsibility for errors or omissions. Neither is any liability assumed for damages resulting from the use of the information contained in this publication.

Contents

Introduction 1
Drive Selection 1
How to Read Model Numbers 2
List of Models 3
General specification 4
Power Ratings 6
Drive Watt Loss 7
Deratings 8
Carrier Frequency Derating 8
Ambient Temperature Derating 9
Altitude Derating 9
Built-in EMC Filters / Leakage Current 10
Electrical Connections 11
Dimensions and Weight 12
Accessories & Power Options 14
Network Communications Option Cards 14
LED/LCD Keypads 15
Keypad Door Mounting Kits 16
Motor Speed Feedback Option Card 16
Heatsink External Mounting Kit 17
Cable Shield Clamp Kit 19
AC Input Reactors 20
AC Output Reactors 21
D1000: Regenerative Converter (AFE) 22
R1000: The intelligent regenerative braking unit 24
Dynamic braking with Braking Resistors 26
Software Tools & Online Info 29
Software Tools 29
CR700 Online Product Information 29
Braking Resistor Selection Tool 29

Introduction

The CR700 offers best in class and most reliable drive performance on the market.

The drive application software features and the robust design of the CR700 have further improved the key functions for stable operations in our crane sequence which has won the trust of our crane customers for over 30 years in filed operation.

The CR700 key focus is to further optimize cranes based on the concepts of Flexible, Easy & Sustainable.

By revolutionizing your facilities and machines, the CR700 will increase productivity, save energy efficiently and reduce total costs with enhanced environmental compatibilities.



Drive Selection

CR700 drives must be selected according to power supply voltage, motor rated current, load profile of the application, and ambient condition of the area they are operated in.

CR700 crane drive is designed for Heavy Duty applications. In Heavy Duty mode the CR700 can run applications with constant torque and heavy overload of up to 150% for 1 minute, such as hoist and crane but also conveyors, presses, certain types of compressors, etc.

CR700 drives are designed to be wall mounted upright and in clean environmental conditions. In case of special mounting methods (heatsink external, horizontal, etc.), high ambient temperature (>50 °C), high altitude (> 1000 m), use of high carrier frequency, and so forth, an output current derating must be considered when selecting the drive.



How to Read Model Numbers

The following diagram and table describe how to read model number of the crane drive.

CIPR – CR70 C 4 005 B B A A - 9700

1 2 3 4 5 6 7 8 9 10

No.	Description
1	Drive Series
2	Product Series • CR70: CR700
3	Region code • C: Europe
4	Voltage class • 4: 400V 3-phase
5	Rated output current ***Note:*** *Refer to the list of models*
6	EMC filter • B: Built-in EMC filter category C3
7	Enclosure design • B: IP20
8	Environmental specification • A: Standard
9	Design revision order
10	VAG Number • 9700: Local Europen Product

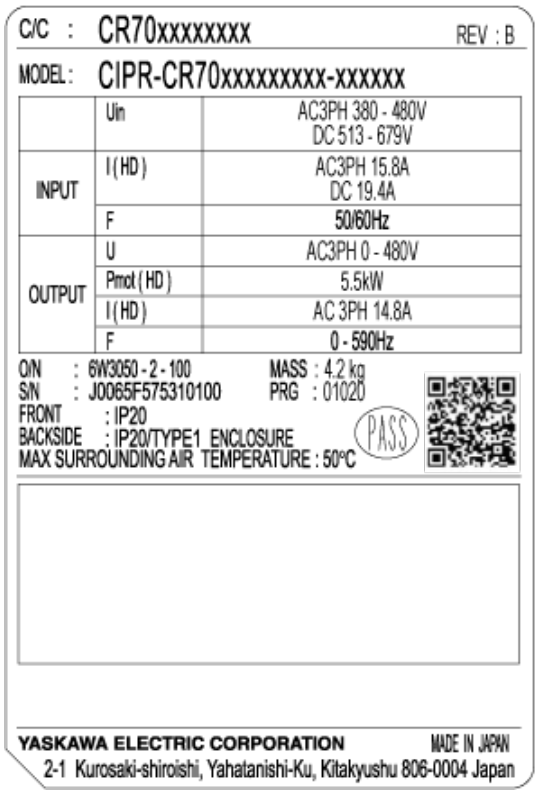

List of Models

Model CIPR-CR70C…	Power	Current	Model Code	SAP#
4002	0,55 kW	1,8 A	CIPR-CR70C4002BBAA-GAAAAA-9700	10111823
4003	0,75 kW	3,4 A	CIPR-CR70C4003BBAA-GAAAAA-9700	10111824
4005	1,5 kW	4,8 A	CIPR-CR70C4005BBAA-GAAAAA-9700	10111825
4006	2,2 kW	5,5 A	CIPR-CR70C4006BBAA-GAAAAA-9700	10111826
4007	3 kW	7,2 A	CIPR-CR70C4007BBAA-GAAAAA-9700	10111827
4009	4 kW	9,2 A	CIPR-CR70C4009BBAA-GAAAAA-9700	10111828
4015	5,5 kW	14,8 A	CIPR-CR70C4015BBAA-GAAAAA-9700	10111829
4018	7,5 kW	18 A	CIPR-CR70C4018BBAA-GAAAAA-9700	10111830
4024	11 kW	24 A	CIPR-CR70C4024BBAA-GAAAAA-9700	10111831
4031	15 kW	31 A	CIPR-CR70C4031BBAA-GAAAAA-9700	10111832
4039	18,5 kW	39 A	CIPR-CR70C4039BBAA-GAAAAA-9700	10111833
4045	22 kW	45 A	CIPR-CR70C4045BBAA-GAAAAA-9700	10111834
4060	30 kW	60 A	CIPR-CR70C4060BBAA-GAAAAA-9700	10111835
4075	37 kW	75 A	CIPR-CR70C4075BBAA-GAAAAA-9700	10111836
4091	45 kW	91 A	CIPR-CR70C4091BBAA-GAAAAA-9700	10111837
4112	55 kW	112 A	CIPR-CR70C4112BBAA-GAAAAA-9700	10111838
4150	75 kW	150 A	CIPR-CR70C4150BBAA-GAAAAA-9700	10111839
4180	90 kW	180 A	CIPR-CR70C4180BBAA-GAAAAA-9700	10111840
4216	110 kW	216 A	CIPR-CR70C4216BBAA-GAAAAA-9700	10111841
4260	132 kW	260 A	CIPR-CR70C4260BBAA-GAAAAA-9700	10111842
4304	160 kW	304 A	CIPR-CR70C4304BBAA-GAAAAA-9700	10111843
4371	200 kW	371 A	CIPR-CR70C4371BBAA-GAAAAA-9700	10111844
4414	220 kW	414 A	CIPR-CR70C4414BBAA-GAAAAA-9700	10111845
4453	250 kW	453 A	CIPR-CR70C4453BBAA-GAAAAA-9700	10111846
4605	315 kW	605 A	CIPR-CR70C4605BBAA-GAAAAA-9700	10111847

General specification

Item	Specification
Control Method	• V/f Control • V/f Control w/ PG • Open Loop Vector Control • Closed Loop Vector • Advanced Open Loop Vector
Frequency Control Range	• Advanced Open Loop Vector Control (AOLV): 0.01Hz - 120 Hz • Closed Loop V/f Control(CL-V/f), Closed Loop Vector Control (CLV): 0.01Hz - 400 Hz • V/f Control (V/f), Open Loop Vector Control (OLV): 0.01 Hz - 590 Hz
Frequency Accuracy (Temperature Fluctuation)	Digital inputs: Within ±0.01% of the maximum output frequency (-10 °C to +40 °C (14 °F to 104 °F)) Analog inputs: Within ±0.1% of the maximum output frequency (25 °C ±10 °C (77 °F ±18 °F))
Frequency Setting Resolution	Digital inputs: 0.01 Hz Analog inputs: 1/2048 of the maximum output frequency (11-bit signed)
Output Frequency Resolution	0.001 Hz
Frequency Setting Signal	Main speed frequency reference: -10 Vdc to +10 Vdc (20 kn), 0 Vdc to 10 Vdc (20 kn), 4 mA to 20 mA (250 n), 0 mA to 20 mA (250 n)
Starting Torque	• V/f Control (V/f): 150%/3 Hz • Closed Loop V/f Control (CL-V/f): 150%/3 Hz • Open Loop Vector Control (OLV): 200%/0.3 Hz • Closed Loop Vector Control (CLV): 200%/0 min-1 • Advanced Open Loop Vector (AOLV): 200%/0.3 Hz
Speed Control Range	• V/f Control (V/f): 1:40 • Closed V/f Control (CL-V/f): 1:40 • Open Loop Vector Control (OLV): 1:200 • Closed Loop Vector Control (CLV): 1:1500 • Advanced Open Loop Vector Control (AOLV): 1:200
Zero Speed Control	Possible in Closed Loop Vector Control (CLV).
Torque Limits	Parameter settings allow separate limits in four quadrants in Open Loop Vector Control (OLV), Closed Loop Vector Control (CLV), and Advanced Open Loop Vector Control (AOLV).
Accel & Decel Time	0.0 sec to 6000.0 sec
Braking Torque	Approx. 20% Approx. 125% with a dynamic braking option • Short-time average deceleration torque Motor output 0.4/0.75 kW: over 100% Motor output 1.5 kW: over 50% Motor output 2.2 kW and larger: over 20%, approximately 40% with overexcitation braking • Continuous regenerative torque: Approx. 20%. Dynamic braking option allows for approximately 125%, 10% ED, 10 s **Note:** • Models 2003 to 2115 and 4002 to 4150 have a braking transistor.
V/f Characteristics	Select from 15 predefined V/f patterns, or a user-set V/f pattern.
Main Control Functions	Droop Control, Feed Forward Control, Zero Servo Function, Torque Limit, 9 Step Speed (max.), Accel/Decel Switch, S-curve Accel/Decel, Auto-Tuning (Rotational and Stationary), Cooling Fan ON/OFF Switch, Slip Compensation, Torque Compensation, Frequency Jump, Upper/lower Limits for Frequency Reference, DC Injection Braking at Start and Stop, Overexcitation Braking, MEMOBUS/Modbus Communication (RS-485: max. 115.2 kbps), Removable Terminal Block with Parameter Backup Function, Online Tuning, Overexcitation Deceleration, Inertia (ASR) Tuning, Crane Sequence.
Motor Protection	Electronic thermal overload protection
Momentary Overcurrent Protection	Drive stops when the output current is more than 200% of the rated output current.
Overload Protection	Drive stops when the output current is more than 150% of the rated output current for 60 s. **Note:** The drive may trigger the overload protection function at 150% of the drive rated output in under 60 s if the output frequency is less than 6 Hz.
Overvoltage Protection	200 V class: Stops when the DC bus voltage is more than approximately 410 V 400 V class: Stops when the DC bus voltage is more than approximately 820 V
Undervoltage Protection	200 V class: Stops when the DC bus voltage decreases to less than approximately 190 V 400 V class: Stops when the DC bus voltage decreases to less than approximately 380 V
Heatsink Overheat Protection	Thermistor

Braking Resistor Overheat Protection	Overheat detection for braking resistor (optional ERF-type, 3% ED)
Stall Prevention	Stall prevention is available during acceleration, deceleration, and during run.
Ground Fault Protection	Electronic circuit protection **Note:** This protection detects any ground faults during run. The drive will not provide protection when: • There is a low-resistance ground fault for the motor cable or terminal block • Energizing the drive when there is a ground fault present.
DC Bus Charge LED	Charge LED illuminates when DC bus voltage is above 50 V.
Area of Use	Indoors • Noxious Fumes: IEC60721-3-3:3C2 • Dust: IEC60721-3-3:3S2
Power Supply	Overvoltage Category III
Ambient Temperature	Open chassis type (IP20): -10°C to +50 °C (14 °F to 122 °F) Enclosed wall-mounted type (UL Type 1): -10 °C to +40 °C (14 °F to 104 °F) • Do not use the drive in a location where the temperature changes suddenly to improve the drive reliability. • When installing the drive in an enclosure, use a cooling fan or air conditioner to keep the internal air temperature in the permitted range. • Do not let the drive freeze. • Derate the output current and output voltage to install the drive in areas with ambient temperatures :S 60 °C (140 °F).
Humidity	95% RH or less Do not let condensation form on the drive.
Storage Temperature	-20 °C to +70 °C (-4 °F to +158 °F) (short-term temperature during transportation)
Surrounding Area	Pollution degree 2 or less Install the drive in an area without: • Oil mist, corrosive or flammable gas, or dust • Metal powder, oil, water, or other unwanted materials • Radioactive materials or flammable materials, including wood • Harmful gas or fluids • Salt • Direct sunlight Keep wood or other flammable materials away from the drive.
Altitude	1000 m (3281 ft.) maximum **Note:** Derate the output current by 1% for each 100 m (328 ft.) to install the drive in altitudes between 1000 m to 4000 m (3281 ft. to 13123 ft.). It is not necessary to derate the rated voltage in these conditions: • Installing the drive at 2000 m (6562 ft.) or lower • Installing the drive between 2000 m to 4000 m (6562 ft. to 13123 ft.) and grounding the neutral point on the power supply. Contact Yaskawa or your nearest sales representative when not grounding the neutral point.
Vibration	• 10 Hz to 20 Hz: 1 G (9.8 m/s2, 32.15 ft/s2) • 20 Hz to 55 Hz: 2003 to 2180, 4002 to 4150: 0.6 G (5.9 m/s2, 19.36 ft/s2) 2215 to 2415, 4180 to 4605: 0.2 G (2.0 m/s2, 6.56 ft/s2)
Installation Orientation	Install the drive vertically for sufficient cooling airflow.
Harmonized Standard	• UL61800-5-1 • EN61800-3 • IEC/EN61800-5-1 • Two Safe Disable inputs and one EDM output according to ISO/EN13849-1 Cat.III PLe, IEC/EN61508 SIL3
Protection Design	Open-chassis type (IP20) Enclosed wall-mounted type (UL Type 1) **Note:** Installing UL Type 1 kit on an open-chassis type (IP20) drive to convert the drive to a wall-mount enclosure (UL Type 1).

Note: Torque Control and DriveWorksEZ requires inverter FW 1026 or higher

Power Ratings

Three-phase 400 V Units

CIPR-CR70C4□□□		002	003	005	006	007	009	015	018	024	031	039	045	060
Maximum Applicable Motor Capacity	kW	0,55	1,1	1,5	2,2	3	4	5,5	7,5	11	15	18,5	22	30
Rated Output Current	Amp	1,8	3,4	4,8	5,5	7,2	9,2	14,8	18	24	31	39	45	60
Rated Output Capacity	kVA	1,2	2,2	3,2	3,6	4,7	6,1	10	12	16	20	26	30	39
Rated Input Current (A)	AC	1,9	3,5	4,7	6,7	8,9	11,7	15,8	21,2	30,6	41,3	50,5	43,1	58,3
	DC	2,3	4,3	5,8	8,2	11	15	20	36	38	51	62	53	72
Default Carrier Frequency	kHz	8	8	8	8	8	8	8	8	8	8	8	8	8
DC Reactor		External Option											Built-in	
Braking Transistor		Built-in												
Maximum Output Voltage		Three phase 380V to 480V Note: The maximum output voltage is proportional to the input voltage												
EMC Filter		Category C2 EMC filter built-in IEC61800-3												
Power Supply		AC Power: Three phase 380V to 480V (-15% to +10%) at 50/60Hz , Allowable Frequency Fluctuation: ±5% DC Power: 513V to 679V												
Input Power	kVA	1,5	2,8	3,7	5,3	7,1	9,3	13	17	24	33	40		

CIPR-CR70C4□□□		075	091	112	150	180	216	260	304	371	414	453	605
Maximum Applicable Motor Capacity	kW	37	45	55	75	90	110	132	160	200	220	250	315
Rated Output Current	Amp	75	91	112	150	180	216	260	304	371	414	453	605
Rated Output Capacity	kVA	49	60	74	99	118	142	171	200	244	272	298	398
Rated Input Current (A)	AC	71,5	86,5	105	142	170	207	248	300	373	410	465	584
	DC	88	106	129	174	209	254	304	367	457	502	569	715
Default Carrier Frequency	kHz	8	8	5	5	5	5	5	5	5	2	2	2
DC Reactor		Built-in											
Braking Transistor		Built-in				External Option							
Maximum Output Voltage		Three phase 380V to 480V Note: The maximum output voltage is proportional to the input voltage											
EMC Filter		Category C2 EMC filter built-in IEC61800-3											
Power Supply		AC Power: Three phase 380V to 480V (-15% to +10%) at 50/60Hz , Allowable Frequency Fluctuation: ±5% DC Power: 513V to 679V											
Input Power	kVA	57	69	84	113	136	165	198	239	297	327	370	465

Drive Watt Loss

CIPR-CR70C4□□□	Power	Current	CR700 Drive Heat Losses			
			Carrier Frequency (kHz)	Inside (W)	Outside (W)	Total Loss (W)
002	0,55 kW	1,8 A	2	13	14	27
003	1,1 kW	3,4 A	2	12	18	30
005	1,5 kW	4,8 A	2	21	32	53
006	2,2 kW	5,5 A	2	28	50	78
007	3 kW	7,2 A	2	35	70	105
009	4 kW	9,2 A	2	44	86	130
015	5,5 kW	14,8 A	2	55	116	171
018	7,5 kW	18 A	2	63	141	204
024	11 kW	24 A	2	93	206	299
031	15 kW	31 A	2	121	286	407
039	18,5 kW	39 A	2	132	331	463
045	22 kW	45 A	2	141	365	506
060	30 kW	60 A	2	188	497	685
075	37 kW	75 A	2	188	557	745
091	45 kW	91 A	2	225	658	883
112	55 kW	112 A	2	275	804	1079
150	75 kW	150 A	2	385	1012	1397
180	90 kW	180 A	2	397	1279	1676
216	110 kW	216 A	2	564	1484	2048
260	132 kW	260 A	2	573	1709	2282
304	160 kW	304 A	2	728	2075	2803
371	200 kW	371 A	2	976	2778	3754
414	220 kW	414 A	2	1118	3133	4251
453	250 kW	453 A	2	1272	3559	4831
605	315 kW	605 A	2	1495	4500	5995

Deratings

Carrier Frequency Derating

The rated current of CR700 drives might need to be reduced depending on the selected carrier frequency.

CIPR-CR70C4□□□	Power	Current	CR700 Rated Output Current in Ampere					
			2 kHz	5 kHz	8 kHz	10 kHz	12.5 kHz	15 kHz
002	0,55 kW	1,8 A	1,8	1,8	1,8	1,6	1,3	1
003	1,1 kW	3,4 A	3,4	3,4	3,4	2,9	2,3	1,7
005	1,5 kW	4,8 A	4,8	4,8	4,8	4,3	3,7	3
006	2,2 kW	5,5 A	5,5	5,5	5,5	4,9	4,1	3,2
007	3 kW	7,2 A	7,2	7,2	7,2	6,5	5,6	4,8
009	4 kW	9,2 A	9,2	9,2	9,2	8,1	6,8	5,4
015	5,5 kW	14,8 A	14,8	14,8	14,8	13,1	11	8,9
018	7,5 kW	18 A	18	18	18	15,9	13,4	10,8
024	11 kW	24 A	24	24	24	21,2	17,7	14,1
031	15 kW	31 A	31	31	31	27,5	23	18,6
039	18,5 kW	39 A	39	39	39	34,5	29	23,4
045	22 kW	45 A	45	45	45	39,1	31,8	24,4
060	30 kW	60 A	60	60	60	53,1	44,6	36
075	37 kW	75 A	75	75	75	66,4	55,7	45
091	45 kW	91 A	91	91	91	80,6	67,6	54,6
112	55 kW	112 A	112	112	91,8	78,4		
150	75 kW	150 A	150	150	123	105		
180	90 kW	180 A	180	180	147,6	126		
216	110 kW	216 A	216	216	177,1	151,2		
260	132 kW	260 A	260	260	213,2	182		
304	160 kW	304 A	304	304	249,3	212,8		
371	200 kW	371 A	371	371	304,2	259,7		
414	220 kW	414 A	389	324,8				
453	250 kW	453 A	453	378,3				
605	315 kW	605 A	605	505,2				

Ambient Temperature Derating

Depending on the mounting condition, enclosure type and ambient temperature derating factors need to be applied on the rated output current of CR700 drives. The derating curves shown below are valid for all frames of CR700.

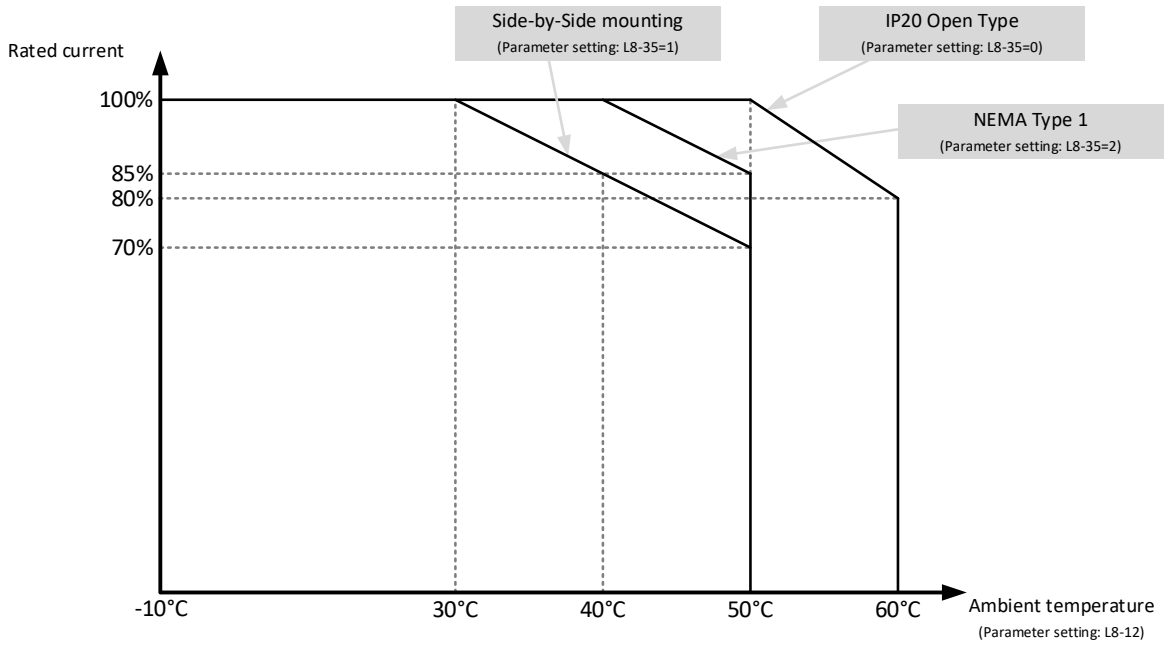

Altitude Derating

CR700 drives can be operated at altitudes up to 1000 m without derating. Between 1000 and 4000 m altitude above sea level a derating of 1 % per 100 m must be applied to the rated output current.

Additionally, a derating must be applied to the rated voltage if the drive is installed over 2000 m above sea level with the neutral point of the power supply ungrounded.

Built-in EMC Filters / Leakage Current

The CR700 drives are equipped with an integrated EMC filter. This filter must be deactivated if the drive is used in an ungrounded system or in a system with unbalanced grounding. For more information, contact your nearest Yaskawa representative.

CIPR-CR70C4□□□	Power	Current	IEC61800-3 Category	Cable Length *1	Leakage Current *2
002	0,55 kW	1,8 A	C3	10 m	36,35 mA
003	1,1 kW	3,4 A	C3	10 m	36,35 mA
005	1,5 kW	4,8 A	C3	10 m	36,35 mA
006	2,2 kW	5,5 A	C3	10 m	36,35 mA
007	3 kW	7,2 A	C3	10 m	36,35 mA
009	4 kW	9,2 A	C3	10 m	36,35 mA
015	5,5 kW	14,8 A	C3	10 m	36,35 mA
018	7,5 kW	18 A	C3	10 m	36,35 mA
024	11 kW	24 A	C3	10 m	36,35 mA
031	15 kW	31 A	C3	10 m	36,35 mA
039	19 kW	39 A	C3	10 m	149,31 mA
045	22 kW	45 A	C3	10 m	149,31 mA
060	30 kW	60 A	C3	10 m	149,31 mA
075	37 kW	75 A	C3	10 m	170,25 mA
091	45 kW	91 A	C3	10 m	170,25 mA
112	55 kW	112 A	C3	10 m	170,25 mA
150	75 kW	150 A	C3	10 m	170,25 mA
180	90 kW	180 A	C3	10 m	196,85 mA
216	110 kW	216 A	C3	10 m	196,85 mA
260	132 kW	260 A	C3	10 m	196,85 mA
304	160 kW	304 A	C3	10 m	196,85 mA
371	200 kW	371 A	C3	10 m	196,85 mA
414	220 kW	414 A	C3	10 m	196,85 mA
453	250 kW	453 A	C3	10 m	196,85 mA
605	315 kW	605 A	C3	10 m	196,85 mA

Note:

*1 Shielded Motor Cable

*2 Leakage currents shown here are calculated and for the EMC filter only. Values in real applications can vary depending on factors like phase voltage imbalance, grounding etc.

Electrical Connections

Connection Diagram

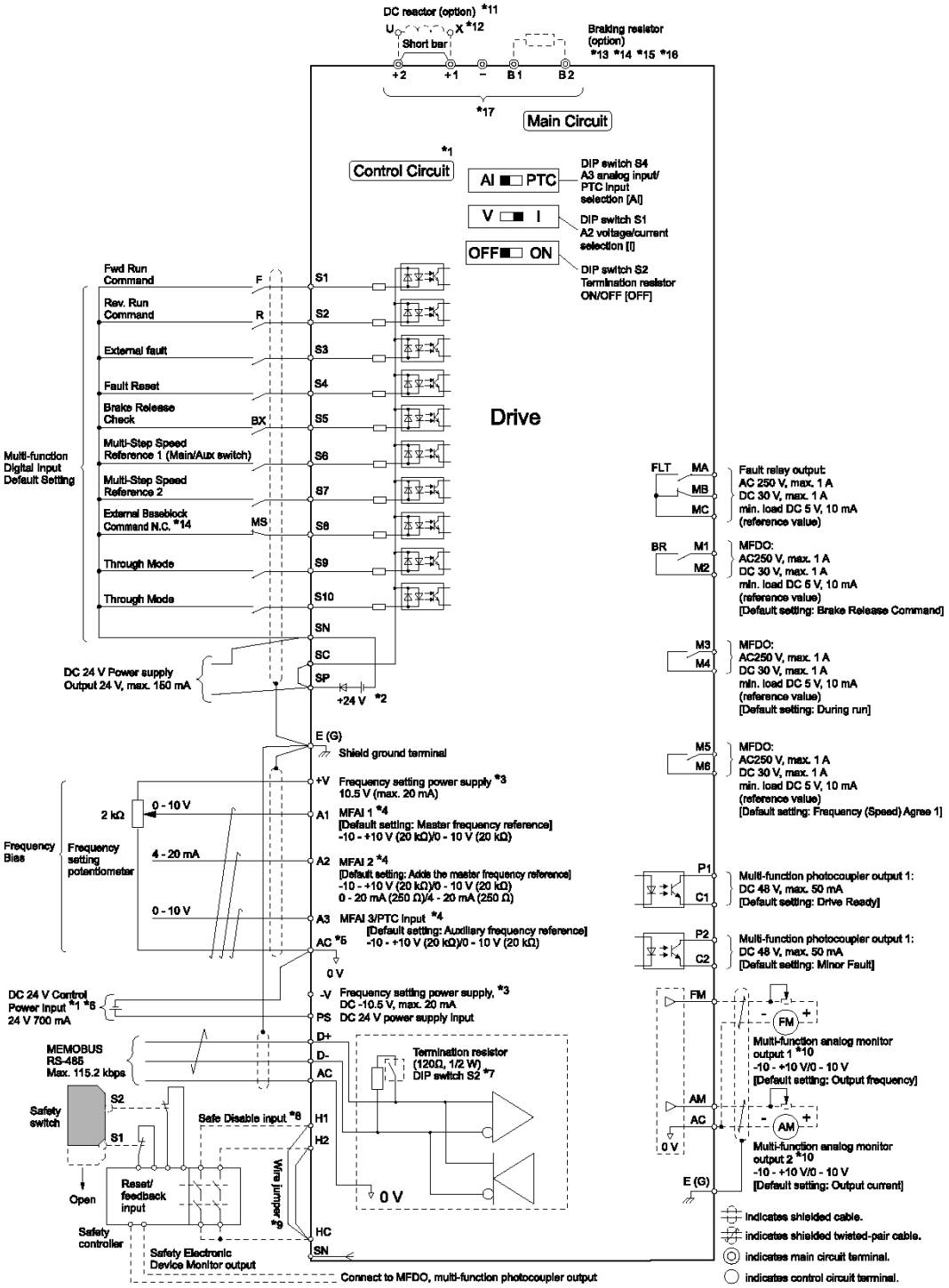

Dimensions and Weight

400V class: 0,55kW to 75kW

Model CIPR-CR70C4□□□	Power	Exterior and Mounting Dimensions	W	H	D	D1	D2	W1	W2	W5	H1	H2	H3	H4	t1	t2	d	Weight (kg)
002	0,55 kW	Figure 1	140	260	176	138	38	102	102		248	6			2	5	M5	3,5
003	1,1 kW		140	260	176	138	38	102	102		248	6			2	5	M5	3,5
005	1,5 kW		140	260	176	138	38	102	102		248	6			2	5	M5	3,5
006	2,2 kW		140	260	211	138	73	102	102		248	6			2	5	M5	3,9
007	3 kW		140	260	211	138	73	102	102		248	6			2	5	M5	3,9
009	4 kW		140	260	211	138	73	102	102		248	6			2	5	M5	3,9
015	5,5 kW		140	260	211	138	73	102	102		248	6			2	5	M5	4,2
018	7,5 kW		140	260	211	138	73	102	102		248	6			2	5	M5	4,2
024	11 kW		180	300	202	134	68	140	140		284	8			2	2	M5	6
031	15 kW		180	300	202	134	68	140	140		284	8			2	2	M5	6
039	18,5 kW		220	350	227	140	87	192	192		335	8			2	2	M6	7,5
045	22 kW		220	350	246	140	106	192	192		335	8			2	2	M6	12
060	30 kW	Figure 2	240	400	280	166	114	195	186	12	375	18		18	2	2	M6	17
075	37 kW	Figure 3	255	450	280	166	114	170	165	12	424	16	29	21	2	2	M6	22
091	45 kW		255	450	280	166	114	170	165	12	424	16	29	21	2	2	M6	25
112	55 kW		264	543	335	186	149	190	182	12	516	18	29	21	2	2	M8	38
150	75 kW		264	543	335	186	149	190	182	12	516	18	29	21	2	2	M8	39

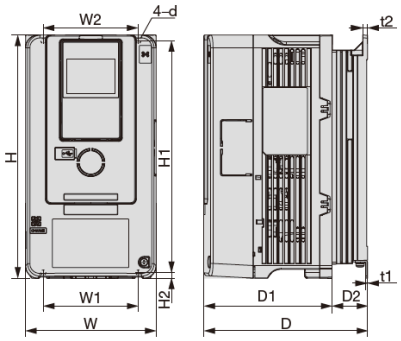

Figure 1

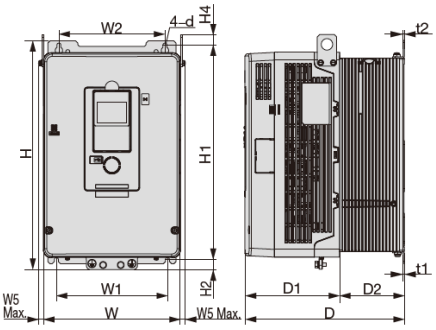

Figure 2

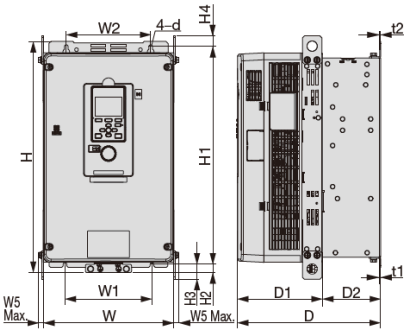

Figure 3


0.55 to 22kW


30kW


37 to 75kW

400V class: 90kW to 315kW

Model CIPR-CR70C4□□□	Power	Exterior and Mounting Dimensions	W	H	D	D1	D2	W1	W2	W5	H1	H2	H3	H4	t1	t2	d	Weight (kg)
180	90 kW	Figure 4	312	700	420	260	160	218	218	18	659	28	44	29	5	5	M10	71
216	110 kW		312	700	420	260	160	218	218	18	659	28	44	29	5	5	M10	71
260	132 kW		312	700	420	260	160	218	218	18	659	28	44	29	5	5	M10	71
304	160 kW	Figure 5	440	800	472	254	218	370	370	20	757	28	44	30	5	5	M12	122
371	200 kW		440	800	472	254	218	370	370	20	757	28	44	30	5	5	M12	126
414	220 kW	Figure 6	510	1136	480	260	220	450	450	20	1093	26	44	31	5	5	M12	198
453	250 kW		510	1136	480	260	220	450	450	20	1093	26	44	31	5	5	M12	198
605	315 kW		510	1136	480	260	220	450	450	20	1093	26	44	31	5	5	M12	207

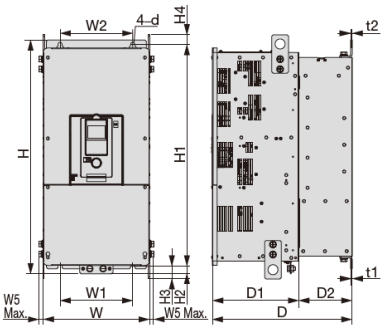

Figure 4

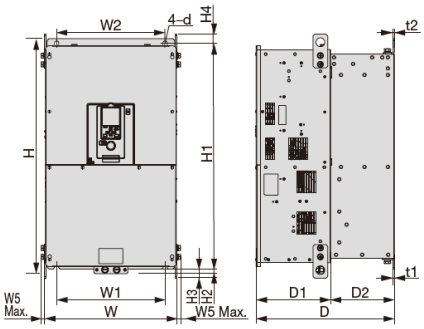

Figure 5

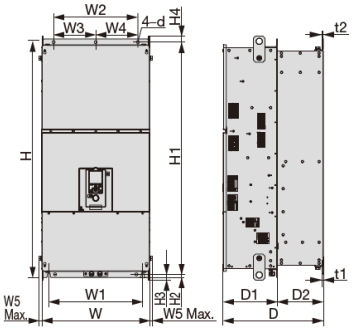

Figure 6


90 to 132kW


160 to 200kW


220 to 315kW

Accessories & Power Options

Network Communications Option Cards

The communication option cards listed below can be mounted on CR700 drive. They are shipped lose together with the required installation material.

Network Type	Model Number	SAP#
Profibus-DP	SI-P3	500-029-593
CANopen	SI-S3	100-046-870
DeviceNet	SI-N3	100-046-869
Mechatrolink	SI-T3	100-089-931
Multi-Protocol *(ProfiNet, EtherNet/IP, EtherCAT, Modbus TCP)*	JOHB-SMP3-MA	10109077

LED/LCD Keypads

LED Full Size Keypad

Option	Model Number	SAP#
LED Full Size Keypad	JVOP-KPLEA04AAA	10010185

This optional LED keypad provides a larger LED display (5 digit, 7 segments) and larger navigation buttons for more comfort during drive operation.

LCD Keypad

Option	Model Number	SAP#
LCD Keypad	JVOP-KPLCA04AEA	10105769

This optional LCD keypad greatly improves the operability of the drive. The high-res screen can display graphics and multi-language full text. Additional functions are: Start-up Wizard, copy function (4 sets of parameters), backup, data logging, real-time clock.

LCD Bluetooth Keypad

Option	Model Number	SAP#
LCD Bluetooth Keypad	JVOP-KPLCC04ABA	10099085

This optional LCD keypad provides the ability to connect to the drive using Bluetooth. It is designed to be able to operate like the LCD keypad if keypad navigation is required.

This keypad is used in conjunction with DriveWizard Mobile to connect to the drive via Bluetooth. You can download DriveWizard Mobile to your mobile device through the Apple AppStore or Google Play.

Extension Cables

Extension cables for keypads are offered in two lengths.

Model Number	Description	SAP#
WV001-YEG	Keypad Remote Mount Cable - 1 Meter	10007058
WV003-YEG	Keypad Remote Mount Cable - 3 Meter	10012366

Appearance

LED Keypad	LCD Keypad	Extension Cable
		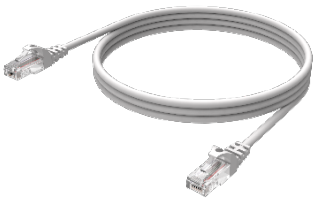

Keypad Door Mounting Kits

Door Mounting Kits for LCD Keypads (with or without Bluetooth)

The LCD keypads can be mounted to a panel front door using one of the mounting kits below.

Type of Mounting	Brackets have tapped holes for use with screws	brackets have untapped holes for use with panel studs
Model Number	900-192-933-001	900-192-933-002
SAP#	10090514	10090515
Appearance	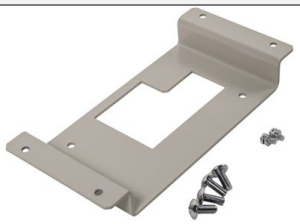	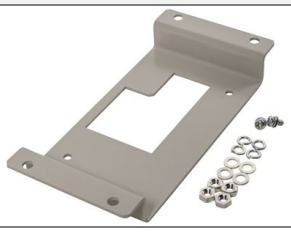

Motor Speed Feedback Option Card

The Motor Speed Feedback Option Card allows the user to connect a driver encoder (PG) for motor speed feedback to the drive to increase the control accuracy and performance in V/f w/PG, CLV, AOLV, and CLV/PM control methods.

This PG encoder signal allows the drive to compensate for subtle variations in the load while providing the drive with the necessary data to control the output frequency and maintain an accurate constant speed.

For motor speed feedback option card details and compatible encoder types check the technical manual.

Supported Encoder Type	**Model Number**	**SAP #**
Open Collector (HTL)	PG-B3	10062639
Line Driver (TTL/RS422)	PG-X3	100-046-872
Resolver (TS2640N321E64)	PG-RT3	100-056-648

Heatsink External Mounting Kit

CR700 drives with IP20 or UL Open Type 1 can be mounted with the heatsink out the back of the panel or enclosure in order have the main source of heat loss outside and so reduce panel volume or panel cooling.

For heatsink external mounting a rectangular cut out in the panel and additional attachments are required. Drives are fixed using a heatsink external mounting kit.

Additional attachments are not required for models CR70A4060 and above. These models are ready for heatsink external mounting by replacing their standard mounting feet.

Important:

- With this method of mounting the rated output current might require a derating. See section “Deratings“ in this document.
- The backside of the drive remains IP20. The externally mounted heatsink should not be exposed to dusty or wet environments that would normally require a higher degree of ingress protection.
- Intake air temperature for external heatsink Open chassis side: 50°C
- Heatsink side: 50°C
- Use only an IP20/UL Open Type for the external heatsink mounting

Model CIPR-CR70C4…	Power	Model Number	SAP#
002	0,55 kW	900-193-209-001	100-203-229
003	1,1 kW	900-193-209-001	100-203-229
005	1,5 kW	900-193-209-001	100-203-229
006	2,2 kW	900-193-209-001	100-203-229
007	3 kW	900-193-209-001	100-203-229
009	4 kW	900-193-209-001	100-203-229
015	5,5 kW	900-193-209-001	100-203-229
018	7,5 kW	900-193-209-001	100-203-229
024	11 kW	900-193-209-002	100-203-230
031	15 kW	900-193-209-002	100-203-230
039	18,5 kW	900-193-209-003	100-203-231
045	22 kW	900-193-209-003	100-204-231

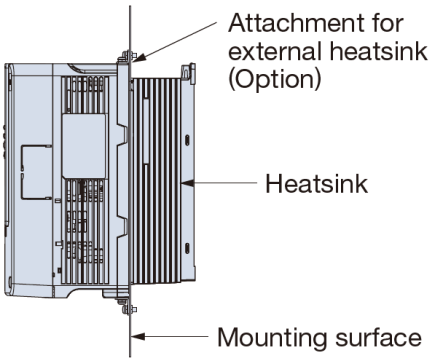

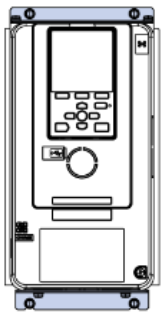

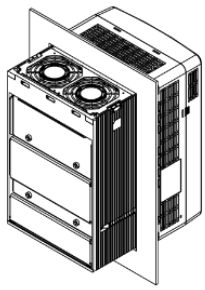

Heatsink External Mounting Kit Option Dimensions

Model CIPR-CR70C4□□□	Power	W	H	D1	D2	W1	W2	W3	W4	W5	H1	H2	H3	H4	H5	A	B	d1
002	0,55 kW	140	294	138	38	102	102	16	3		282	23	6	26	6	134	233	M5
003	1,1 kW	140	294	138	38	102	102	16	3		282	23	6	26	6	134	233	M5
005	1,5 kW	140	294	138	38	102	102	16	3		282	23	6	26	6	134	233	M5
006	2,2 kW	140	294	138	73	102	102	16	3		282	23	6	26	6	134	233	M5
007	3 kW	140	294	138	73	102	102	16	3		282	23	6	26	6	134	233	M5
009	4 kW	140	294	138	73	102	102	16	3		282	23	6	26	6	134	233	M5
015	5,5 kW	140	294	138	73	102	102	16	3		282	23	6	26	6	134	233	M5
018	7,5 kW	140	294	138	73	102	102	16	3		282	23	6	26	6	134	233	M5
024	11 kW	180	329	134	68	140	140	17	3		318	23,5	5	24,5	6	174	270	M5
031	15 kW	180	329	134	68	140	140	17	3		318	23,5	5	24,5	6	174	270	M5
039	18,5 kW	220	384	140	87	192	192	11	3		371	27	7	25	6	214	319	M6
045	22 kW	220	384	140	106	192	192	11	3		371	27	7	25	6	214	319	M6

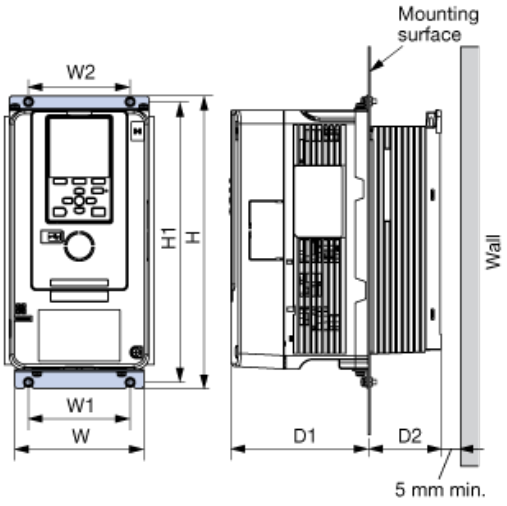

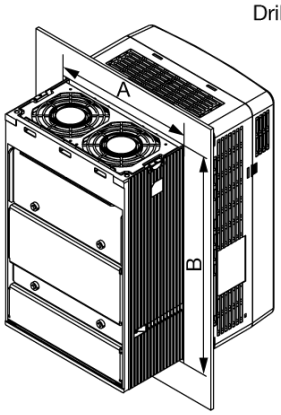

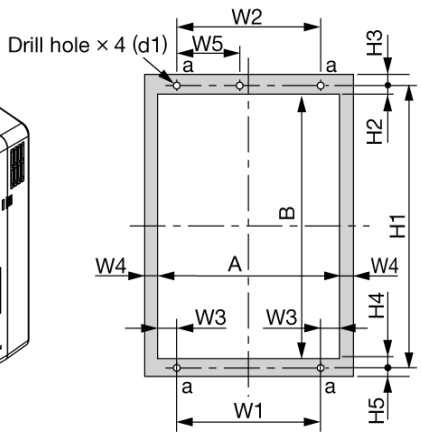

Cable Shield Clamp Kit

A cable shield kit can be mounted at the bottom of the drive to easy cable shield connection and provide a strain relief at the same time

Important:
- Cable shield and UL Type 1 kits cannot be installed simultaneously.

Model CIPR-CR70 C4□□□	Power	W	H	D	D1	D2	D3	W1	H0	H3	Model Number	SAP#
002	0,55 kW	140	339	176	39	61	123	137	260	79	900-195-896-001	100-206-983
003	1,1 kW	140	339	176	39	61	123	137	260	79	900-195-896-001	100-206-983
005	1,5 kW	140	339	211	73	96	158	137	260	79	900-195-896-001	100-206-983
006	2,2 kW	140	339	211	73	96	158	137	260	79	900-195-896-001	100-206-983
007	3 kW	140	339	211	73	96	158	137	260	79	900-195-896-001	100-206-983
009	4 kW	140	339	211	73	96	158	137	260	79	900-195-896-001	100-206-983
015	5,5 kW	140	339	211	73	96	158	137	260	79	900-195-896-001	100-206-983
018	7,5 kW	140	339	211	73	96	158	137	260	79	900-195-896-001	100-206-983
024	11 kW	180	439	202	68	93	148	175	298	141	900-195-896-002	100-206-984
031	15 kW	180	439	202	68	93	148	175	298	141	900-195-896-002	100-206-984

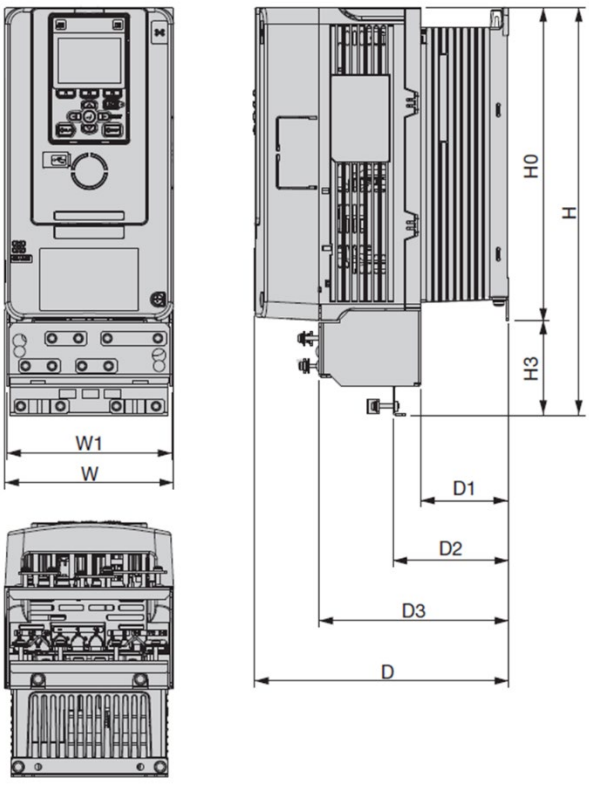

AC Input Reactors

Input reactors can be applied to reduce harmonic distortion on the AC input line. Reactors are offered with 4% uk. IP20 covers are separately available.

Model CIPR-CR70C4□□□	Power	Current	IP00	IP20 cover	SAP # IP00	SAP# IP20 cover
002	0,55 kW	1,8 A	LR3 40-4/4	IP20-BOX32	10011015	10062614
003	1,1 kW	3,4 A	LR3 40-4/6	IP20-BOX32	10011019	10062614
005	1,5 kW	4,8 A	LR3 40-4/10	IP20-BOX32	10011004	10062614
006	2,2 kW	5,5 A	LR3 40-4/10	IP20-BOX32	10011004	10062614
007	3 kW	7,2 A	LR3 40-4/16	IP20-BOX32	10011007	10062614
009	4 kW	9,2 A	LR3 40-4/16	IP20-BOX32	10011007	10062614
015	5,5 kW	14,8 A	LR3 40-4/25	IP20-BOX33	10011012	10062615
018	7,5 kW	18 A	LR3 40-4/45	IP20-BOX35	10011017	10062617
024	11 kW	24 A	LR3 40-4/45	IP20-BOX35	10011017	10062617
031	15 kW	31 A	LR3 40-4/63	IP20-BOX36	10003639	10062618
039	18,5 kW	39 A	LR3 40-4/63	IP20-BOX36	10003639	10062618
045	22 kW	45 A	LR3 40-4/63	IP20-BOX36	10003639	10062618
060	30 kW	60 A	LR3 40-4/90	IP20-BOX39	10011023	10062621
075	37 kW	75 A	LR3 40-4/90	IP20-BOX39	10011023	10062621
091	45 kW	91 A	LR3 40-4/115	IP20-BOX41	10011005	10062623
112	55 kW	112 A	LR3 40-4/160	IP20-BOX41	10003637	10062623
150	75 kW	150 A	LR3 40-4/200	IP20-BOX41	10011011	10062623
180	90 kW	180 A	LR3 40-4/250	IP20-BOX44	10011013	10062626
216	110 kW	216 A	LR3 40-4/250	IP20-BOX44	10011013	10062626
260	132 kW	260 A	LR3 40-4/300	IP20-BOX44	10003638	10062626
304	160 kW	304 A	LR3 40-4/400	IP20-BOX44	10011016	10062626
371	200 kW	371 A	LR3 40-4/400	IP20-BOX44	10011016	10062626
414	220 kW	414 A	LR3 40-4/500	IP20-BOX45	10011018	10062627
453	250 kW	453 A	LR3 40-4/710	IP20-BOX46	10011022	10062628
605	315 kW	605 A	LR3 40-4/710	IP20-BOX46	10011022	10062628

AC Output Reactors

Output reactors limit voltage peaks at the motor winding, especially with long motor cables, thus improving the motor service life. The output reactor must be selected with the maximum output frequency in mind. If you are operating crane application above 22kW use the reactor up to 120 Hz.

		Up to 120 Hz		Up to 50 Hz	
Model CIPR-CR70C4□□□	**Power**	**IP00**	**IP20 cover**	**IP00**	**IP20 cover**
002	0,55 kW	MDB 400/6,3	IP20-BOX31	MR3 400/4	IP20-BOX31
003	1,1 kW	MDB 400/6,3	IP20-BOX31	MR3 400/10	IP20-BOX32
005	1,5 kW	MDB 400/6,3	IP20-BOX31	MR3 400/10	IP20-BOX32
006	2,2 kW	MDB 400/13	IP20-BOX32	MR3 400/10	IP20-BOX32
007	3 kW	MDB 400/13	IP20-BOX32	MR3 400/10	IP20-BOX32
009	4 kW	MDB 400/13	IP20-BOX32	MR3 400/18	IP20-BOX32
015	5,5 kW	MDB 400/24	IP20-BOX36	MR3 400/24	IP20-BOX32
018	7,5 kW	MDB 400/24	IP20-BOX36	MR3 400/37	IP20-BOX33
024	11 kW	MDB 400/46	IP20-BOX37	MR3 400/48	IP20-BOX35
031	15 kW	MDB 400/46	IP20-BOX37	MR3 400/48	IP20-BOX35
039	18,5 kW	MDB 400/46	IP20-BOX37	MR3 400/48	IP20-BOX35
045	22 kW	MDB 400/72	IP20-BOX37	MR3 400/61	IP20-BOX35
060	30 kW	MDB 400/72	IP20-BOX37		
075	37 kW	MDB 400/110	IP20-BOX39		
091	45 kW	MDB 400/110	IP20-BOX39		
112	55 kW	MDB 400/176	IP20-BOX41		
150	75 kW	MDB 400/250	IP20-BOX41		
180	90 kW	MDB 400/250	IP20-BOX41		
216	110 kW	MDB 400/250	IP20-BOX41		
260	132 kW	MDB 400/380	IP20-BOX41		
304	160 kW	MDB 400/380	IP20-BOX41		
371	200 kW	MDB 400/430	IP20-BOX44		
414	220 kW	MDB 400/700	IP20-BOX45		
453	250 kW	MDB 400/700	IP20-BOX45		
605	315 kW	MDB 400/700	IP20-BOX45		

D1000: Regenerative Converter (AFE)

The D1000 regenerative converter unit complements the Yaskawa product range with a low harmonics Active Frontend Solution. Suitable for standard and regenerative applications with individual drives or systems of inverter drives, the D1000 feeds excess braking energy back into the power grid instead of dissipating it as heat and keeps the harmonic migration below 5% under full load.

The D1000 KIT is a pre-configured package that includes D1000 regenerative converter unit, EMC filter, input reactor(s) and harmonic filter module.

D1000 KIT (with THD filter module in IP00 protection)

Power	D1000 KIT Model Number	SAP#
5 kW	D1KIT40005AAAAB	10009715
10 kW	D1KIT40010AAAAB	10009718
20 kW	D1KIT40020AAAAB	10009722
30 kW	D1KIT40030AAAAB	10009726
40 kW	D1KIT40040AAAAB	10009730
60 kW	D1KIT40060AAAAB	10009734
100 kW	D1KIT40100AAAAB	10009736
130 kW	D1KIT40130AAAAB	10009738
185 kW	D1KIT40185AAAAB	10009740
270 kW	D1KIT40270AAAAB	10009742
370 kW	D1KIT40370AAAAB	10009744
630 kW	D1KIT40630AAAAB	10009746

D1000 KIT (with THD filter module in IP20 protection)

Power	D1000 KIT Model Number	SAP#
5 kW	D1KIT40005AABAB	10009716
10 kW	D1KIT40010AABAB	10009719
20 kW	D1KIT40020AABAB	10009723
30 kW	D1KIT40030AABAB	10009727
40 kW	D1KIT40040AABAB	10009731

For more detail such as dimensions or weight check the D1000 catalog or visit the D1000 (D1000 Regenerative Converter) or CR700 (CR700 online info) web information.

Schematic diagram

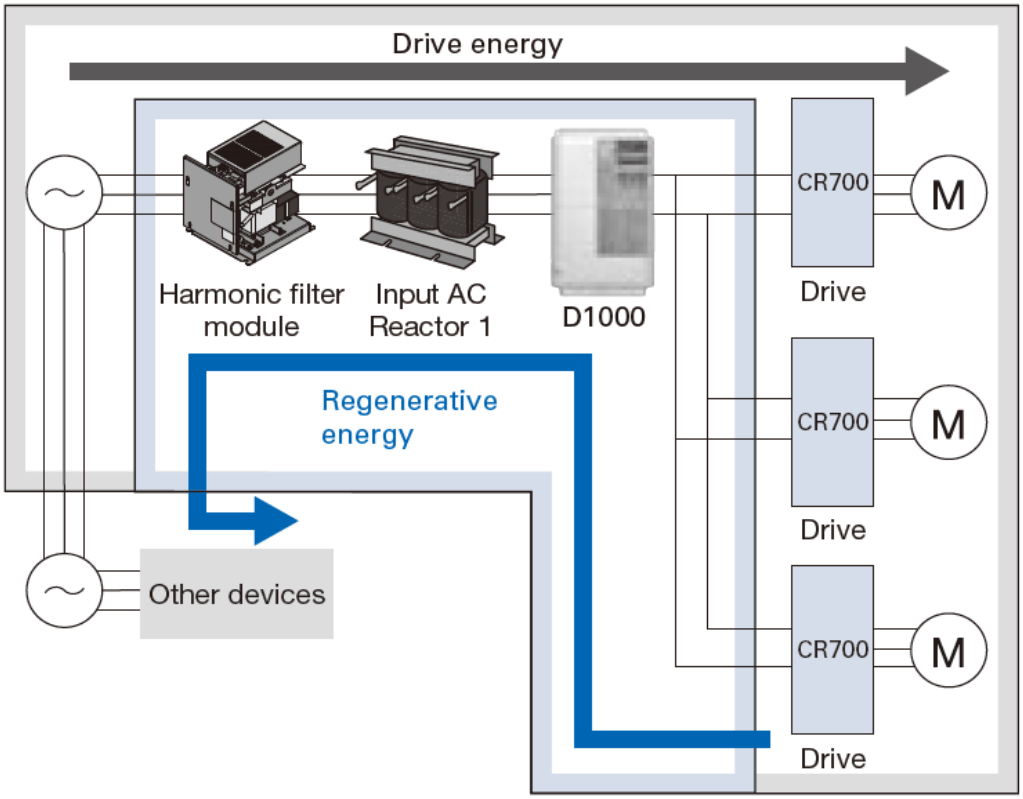

D1000 KIT components (example with IP20 THD filter cover)



D1000 Regenerative Converter Unit

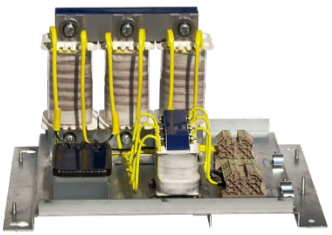

THD filter



EMC filter



THD filter cover (IP20)

R1000: The intelligent regenerative braking unit

The R1000 regenerative braking unit is a smart and efficient alternative to dynamic braking for single or multi-axis drive installations with a high amount of regenerative motor operation. Instead of wasting the braking energy as heat, the R1000 feeds excessive braking energy back to the grid.

The R1000 KIT is a pre-configured package that include R1000 regenerative converter unit and current suppression reactor.

Power	Model Number (R1000 KIT with IP20 reactor)	SAP#	Model Number (R1000 KIT with IP00 reactor)	SAP#
3,5 kW	R1KIT40003AABAA	10011484	R1KIT40003AAAAA	10011483
5 kW	R1KIT40005AABAA	10011486	R1KIT40005AAAAA	10011485
7 kW	R1KIT40007AABAA	10011488	R1KIT40007AAAAA	10011487
10 kW	R1KIT40010AABAA	10011490	R1KIT40010AAAAA	10011489
14 kW	R1KIT40014AABAA	10011492	R1KIT40014AAAAA	10011491
17 kW	R1KIT40017AABAA	10011494	R1KIT40017AAAAA	10011493
20 kW	R1KIT40020AABAA	10011496	R1KIT40020AAAAA	10011495
28 kW	R1KIT40028AABAA	10011498	R1KIT40028AAAAA	10011497
35 kW	R1KIT40035AABAA	10011500	R1KIT40035AAAAA	10011499
43 kW	R1KIT40043AABAA	10011502	R1KIT40043AAAAA	10011501
53 kW	R1KIT40053AABAA	10011504	R1KIT40053AAAAA	10011503
73 kW	R1KIT40073AABAA	10011506	R1KIT40073AAAAA	10011505
105 kW	R1KIT40105AABAA	10011508	R1KIT40105AAAAA	10011507
150 kW	R1KIT40150AABAA	10011510	R1KIT40150AAAAA	10011509
210 kW	R1KIT40210AABAA	10011512	R1KIT40210AAAAA	10011511
300 kW	R1KIT40300AABAA	10011514	R1KIT40300AAAAA	10011513

Note:
Each system that incorporates an R1000 unit must include the Power Coordinating Reactor, Current Suppression Reactor and EMC Filter. The Current Suppression Reactor must only withstand the regenerative current and is therefore included in the R1000 kit. However, the Power Coordinating Reactor (AC Input Reactor) and EMC Filter must also withstand the motoring current going into de system. Since the input current can be higher than the regenerative current depending on the application, these components must be ordered separately. Fuses in the R1000 branch must be installed by the customer according to Yaskawa recommendations.

For more detail such as dimensions or weight check the R1000 catalog or visit the R1000 (R1000 Regenerative Unit) or CR700 (CR700 online info) web information.

Schematic diagram

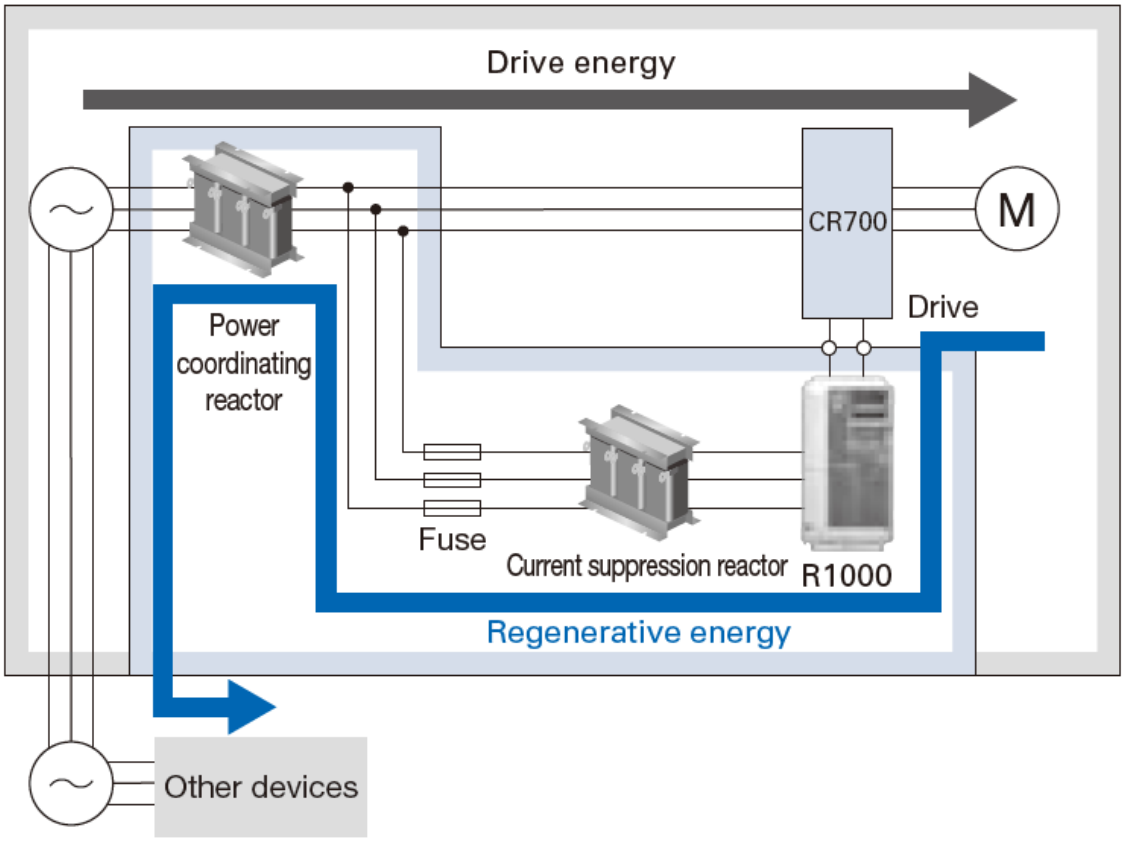

R1000 KIT components (example with IP20 reactor cover)



R1000 Regenerative Converter Unit



Current suppression reactor



Reactor cover (IP20)

Dynamic braking with Braking Resistors

When lowering the load with a crane the motor works in regenerative mode for the whole lowering process. Reason for this is additional energy feedback (kinetic energy of the machine) to the inverter during lowering the load. The motor produces a braking torque which causes voltage increase on the DC bus. This causes a rise of the DC bus voltage. If the feedback energy is too high, the inverter may trip with an overvoltage fault (OV). In this case a braking resistor or a combination of a braking unit and a braking resistor must be used to dissipate the energy as heat.

CR700 drives have embedded braking transistors up to drive capacity of 75kW. Resistors selected from the table below can be directly connected to terminals B1 and B2. When connecting with other resistors, the resistance must be higher than the minimum value listed below. See more details on next page

Schematic diagram

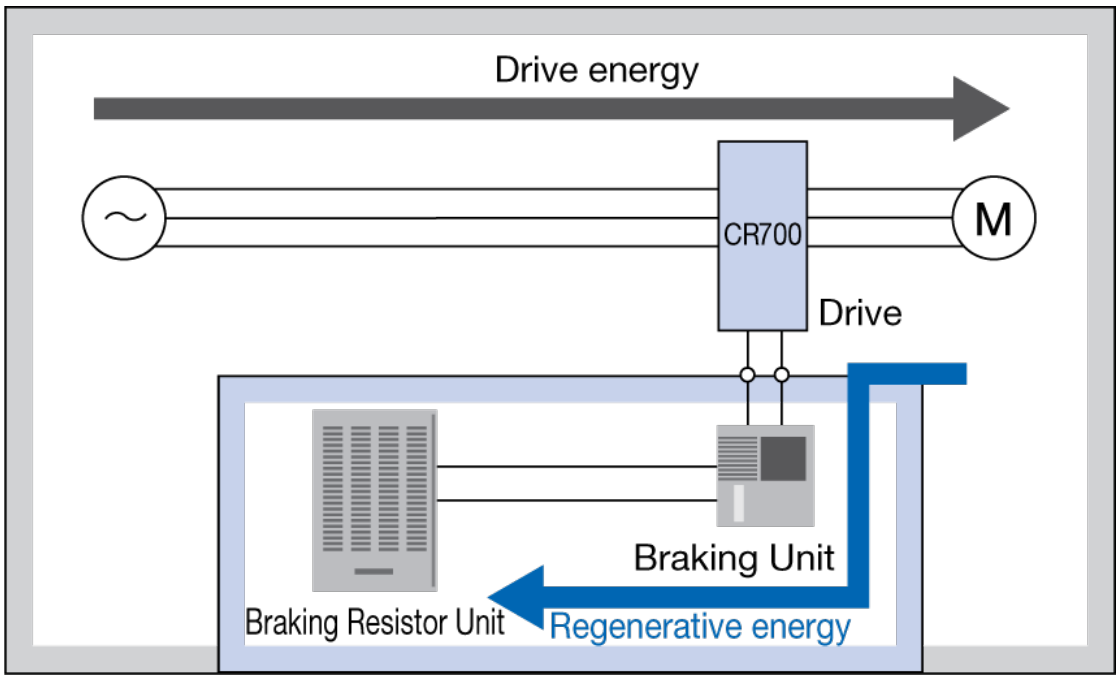

Dynamic braking item examples



CDBR-4045D





Braking Resistor Series RH

Braking Resistor Selection Tool

The Braking Resistor Selection Tool is designed for Yaskawa inverters only and is available online at CR700 webpage. This tool will support you on proper sizing of necessary braking components.

Keep in mind that entering incorrect application information might result in wrong component selection which might lead to damage of the drive and/or braking options. Furthermore, it might also lead to insufficient braking power.

Never fall below the minimum connectable braking resistor value. This will damage your CR700 drive.

Min. connectable braking resistor values

Model CIPR-CR70C□□□	Min. Resistor*1 [Ω]
4002	165
4003	165
4005	110
4006	110
4007	55
4009	55
4015	32
4018	32
4024	20
4031	20
4039	19,2
4045	19,2
4060	19,2

Model CIPR-CR70C□□□	Min. Resistor*1 [Ω]
4075	10,6
4091	8,7
4112	7,2
4150	5,2
4180	10,6
4216	19,2
4260	10,6
4304	10,6
4371	10,6
4414	10,6
4453	10,6
4605	10,6

*1: This value is the min. resistor value which can be connected to the drive. Lower value will result in damage of the CR700 and/or braking unit. The braking unit should have a higher resistance level than the minimum connectable resistance value and be able to generate enough braking torque to stop the motor. For more information on the braking resistor check the technical data sheet of the resistor or contact your nearest Yaskawa sales representative.

General Note:

- Be sure to protect braking resistors by thermal overload relay

Dimensions: CDBR braking unit

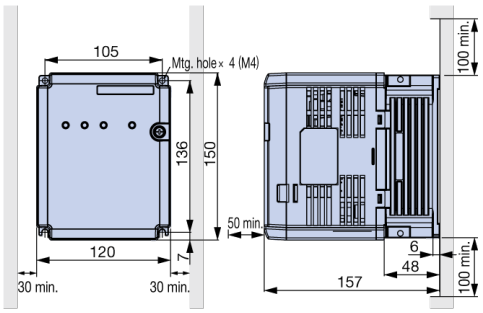

Weight: 2 kg

CDBR-4045D

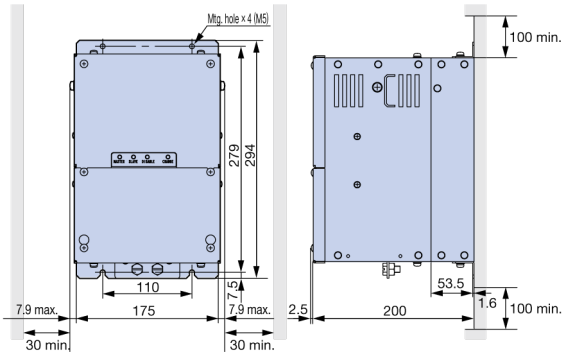

Weight: 7.5 kg

CDBR-4220D

Braking Unit	Max. discharge current (A) 10% ED (10 sec. max)	Rated discharge current (A) continuous	Watt Loss (W)	SAP#
4045D	60	18	36	100-091-723
4090D	100	30	51	100-091-525
4220D	250	80	152	100-091-526

General Note:

- Be sure to protect braking resistors by thermal overload relay
- When using more than one braking unit connected in parallel, set one of the braking units as the master, and set the others as slaves
- Connect CDBR fault relay output to multi-function digital input S (External Fault). Connect the CDBR transistor short-circuit detection output to disconnect main input power to the drive
- Contact your Yaskawa or nearest sales representative for a replacement manual when connecting braking units CDBR-□B, CDBR-□C, and CDBR-□D in parallel.

Software Tools & Online Info

Software Tools

Tool	Description	System	Connection
DriveWizard 10	PC Tool for parameter management/backup/diagnostics	Windows	USB-mini
DriveWorksEZ 10	Customization tool with drag-n-drop icon-based programming	Windows	USB-mini
DriveWizard Mobile	Mobile app for parameter management/backup/diagnostics	Android	• Bluetooth • USB-mini with USB on-the-go adapter
		iPhone	• Bluetooth

CR700 Online Product Information

CR700 Product Info

Braking Resistor Selection Tool

CR700 Hoist Solution Tool

CR700

THE CRANE DRIVE PERFORMANCE



YASKAWA Europe GmbH

Philipp-Reis-Str. 6
65795 Hattersheim am Main
Germany

+49 6196 569-500
support@yaskawa.eu
www.yaskawa.eu.com

Document: CR700 Data Sheet v.1.0
Published: 13.03.2026

Specifications are subject to change without notice for ongoing product modifications and improvements. © YASKAWA Europe GmbH. All rights reserved.

YASKAWA