AC-Motors

IGK/IGKU

9 - 280W

housed ac-motors, convectional-cooled

technical feature

- large adjustment range with inverter Drives because of the fanless design (typ. approx. 3-70Hz possible)
- **UL-certification with the IGKU motors**
- compact, plain single- and three-phase motors
- higher power density from a smaller construction volume
- minimal losses lead to optimum efficiency
- energy saving compared with standard motors
- smooth and easy-to-clean design suitable for critical application
- type of protection IP 54 or IP 65 / thermal class F
- compatible with all Groschopp gearboxes
- … and basically for all other gearboxes from other manufacturers
- standard on three phases with operating capacitors on 1x230V, and to use with a 1x230V-inverter drives. 3x400V inverter drive with optional phase phase insulation
- options: e.g. brakes, thermal sensor, encoder systems
- 2- and 4-pole drives

The IGKU series are convincing due to their new efficient design. Evidence are the higher power density and the improve heat dissipation in comparison with their ancestors. This allows a reduction in size with no loss in power.

Certification and Labels:

BRETZEL GmbH · Antriebs- und Elektrotechnik
Am Rotböll 8 · 64331 Weiterstadt · Telefax 0 61 50 / 8 65 60 - 69
www.bretzel-gmbh.de · info@bretzel-gmbh.de

Do you have interest in this product?
Please call us at:
Telefon 0 61 50 / 8 65 60 - 0

available types with performance data

Typ [IGK/-U]	rated power P2 W	speed n min^{-1}	torque M Ncm	rated current Iy A	input power P1 W	rel. start torque M_{start}/M	rel. breakdown torque M_{kill}/M	efficiency η %	power factor cos(φ)	capacitor C µF
2-poles (approx. 2800 r.p.m.)										
preferred types										
65-40	45	2680	16,3	0,18	87,6	2,12	2,12	52,2	0,69	4
80-40	105	2700	37,4	0,28	159	2,10	2,10	66,0	0,82	8
80-60	160	2800	57,4	0,44	229	2,80	2,70	70,0	0,75	10
100-80	370	2830	125	0,78	468	2,50	3,00	79,0	0,87	25
additional types										
65-20	18	2700	6,44	0,08	36,9	1,75	1,85	49,0	0,69	3
65-60	65	2700	23,0	0,23	111	2,30	2,20	58,3	0,72	6
80-20	40	2770	13,9	0,18	80	2,50	2,50	50,1	0,64	5
80-80	200	2820	67,70	0,50	271	3,20	2,80	74,0	0,78	14
90-40	130	2800	45	0,33	181	2,10	2,40	72,0	0,79	10
90-60	200	2830	67,6	0,48	253	2,60	2,90	79,1	0,76	14
90-80	260	2830	87,7	0,63	345	3,70	3,40	75,4	0,79	18
100-40	205	2790	70,0	0,48	282	2,10	2,40	72,6	0,85	14
100-60	280	2830	94	0,62	364	2,5	3,00	76,9	0,85	18
4-poles (ca. 1400 r.p.m.)										
preferred types										
65-40	18	1270	13,6	0,12	55,0	1,95	1,76	32,8	0,64	3
80-40	66	1320	47,9	0,26	125	1,98	1,95	52,8	0,70	6
80-60	90	1330	64,7	0,35	156	2,37	2,28	57,7	0,65	8
100-80	230	1370	160	0,61	321	2,31	2,36	71,7	0,76	18
additional types										
65-20	9	1270	6,77	0,08	39,8	1,75	1,76	23,0	0,70	2,0
65-60	28	1300	20,7	0,17	71,0	2,08	2,05	39,4	0,63	3,5
80-20	28	1330	20,1	0,14	69,0	1,60	1,75	40,6	0,74	4
80-80	115	1340	82,2	0,42	190	2,70	2,49	60,5	0,65	12
90-40	80	1380	55,7	0,29	135	2,03	2,24	54,9	0,67	6
90-60	120	1380	84,6	0,40	191	2,35	2,28	62,8	0,69	9
90-80	150	1380	104	0,47	222	2,50	2,50	67,7	0,68	12
100-40	120	1380	83	0,37	187	1,98	2,00	64,2	0,73	9
100-60	175	1390	120	0,49	254	2,10	2,14	68,9	0,75	14

BRETZEL GmbH · Antriebs- und Elektrotechnik
Am Rotböll 8 · 64331 Weiterstadt · Telefax 0 61 50 / 8 65 60 - 69
www.bretzel-gmbh.de · info@bretzel-gmbh.de

technical information

motor technologie	2- or 4-pole AC-induction motors Standard on three phases or with operating capacitors on 1x230V, and to use with a 1x230V-inverter drives. 3x400V inverter drive with optional phase Phase insulation.
connection	star/delta: 400/230V
power output range	9 bis 370W
insulation class	F (max. winding temperature 155°C)
housing	aluminum continuous casting, bearing shield aluminum pressure casting
type	B3/B14 or with screw foot
protection [1]	IP54
type of cooling	convectional (fanless cooling over the surface, standard for continuous operation, ED=100%)
connection System	terminal box (terminal board with bolts)
painting	RAL 5002, ultramarine blue, semi-gloss
terminal box	K3, plastic, with cable gland, 2x PG11
	AK2, aluminum, with cable gland, 2x M20

Options

electrical	• special voltage and speed • increased torque for a short period of time • strengthened phase insulation for operating on a 3x400 drive inverter • mounted inverter type MFR
mechanical	special design for your requirements are possible
brakes	24VDC or 205VDC (from terminal box with integrated commutator)
encoder System	encoder, resolver, speed generator
temperature monitoring	heat monitor with NC-contact or triple-PTC
protection[1]	up to IP65 possible (due to permanently elastic or O-ring at the bearing shield)
painting	special painting
coating	surface coating, e.g. Hard-Coat, SilaCoat, DurniCoat
certifications	UL, UR oder CSA
terminal box	K3E plastic, EMC conform with screw connection 2x PG11
	AK2 metal, EMC conform with screw connection 2x M20x1,5
	(dimension drawing of the terminal boxes are given later in this data sheet)

[1]Information about the protection of motors relate to the assembled state with gearboxes. The type of protection is for the electronic equipment. Protection types of gearboxes are to be requested separately.

BRETZEL GmbH · Antriebs- und Elektrotechnik
Am Rotböll 8 · 64331 Weiterstadt · Telefax 0 61 50 / 8 65 60 - 69
www.bretzel-gmbh.de · info@bretzel-gmbh.de

technical drawing and dimension

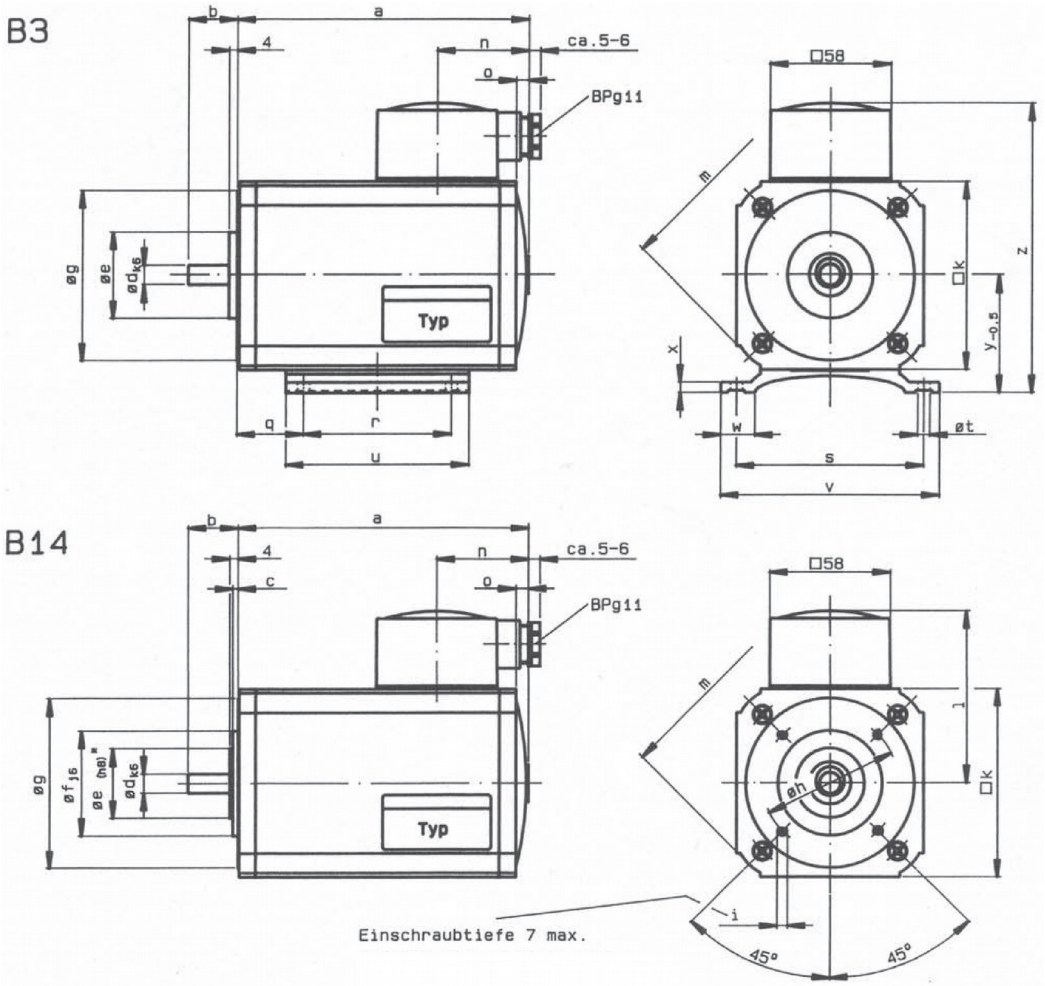

(Our preferred types are basically mechanically prepared for attaching to our gearboxes. Therefore the shaft- and flange-*dimensions differ from the drawings above. For requests without gearboxes we do ask for a separate consultation.)*

Typ [IGK] [IGKU]	a		b		c	d	e		f	g	h	i	k	l	m	n	o	q	r	s	t	u	v	w	x	y	z	Masse
	B3	B14	B3	B14			B3	B14																				kg
65-20	105	104,5																18,5										1,7
65-40	125	124,5			---		33	32	---	66	45	M4	73	85	92	44,5	5	28,5	54	80	5,8	70	95	16,5	4,5	45	130	2,2
65-60	145	144,5																38,5										2,7
80-20	100	99,5	23,5	24		9												12										2,0
80-40	120	119,5																22										2,7
80-60	140	139,5						33	50	81	65		90	93,5	110	44,5	6	32	71	90	5,8	88	105	16,5	5	56	149,5	3,4
80-80	160	159,5										M5						42										4,2
90-40	127,5	127																21										3,4
90-60	147,5	147	26,5	27	2,5	11	41		60	91	75		100	98,5	123	44,5	6,5	31	80	100	7	102	120	21	6	63	161,5	4,3
90-80	167,5	167																41										5,2
100-40	134,5	131						42										18										4,7
100-60	151,5	151	33,5	34		14			70	101	85	M6	112	104,5	137	44,5	6,5	28	90	112	7	115	135	23,5	7	71	175,5	5,7
100-80	171,5	171																38										6,7

BRETZEL GmbH · Antriebs- und Elektrotechnik
Am Rotböll 8 · 64331 Weiterstadt · Telefax 0 61 50 / 8 65 60 - 69
www.bretzel-gmbh.de · info@bretzel-gmbh.de

Do you have interest in this product?
Please call us at:
Telefon 0 61 50 / 8 65 60 - 0

available flanges and shafts

flange- and shaft-dimensions for attaching to gearboxes: VE31, Z3, Z5, Z10, Z14, Z20

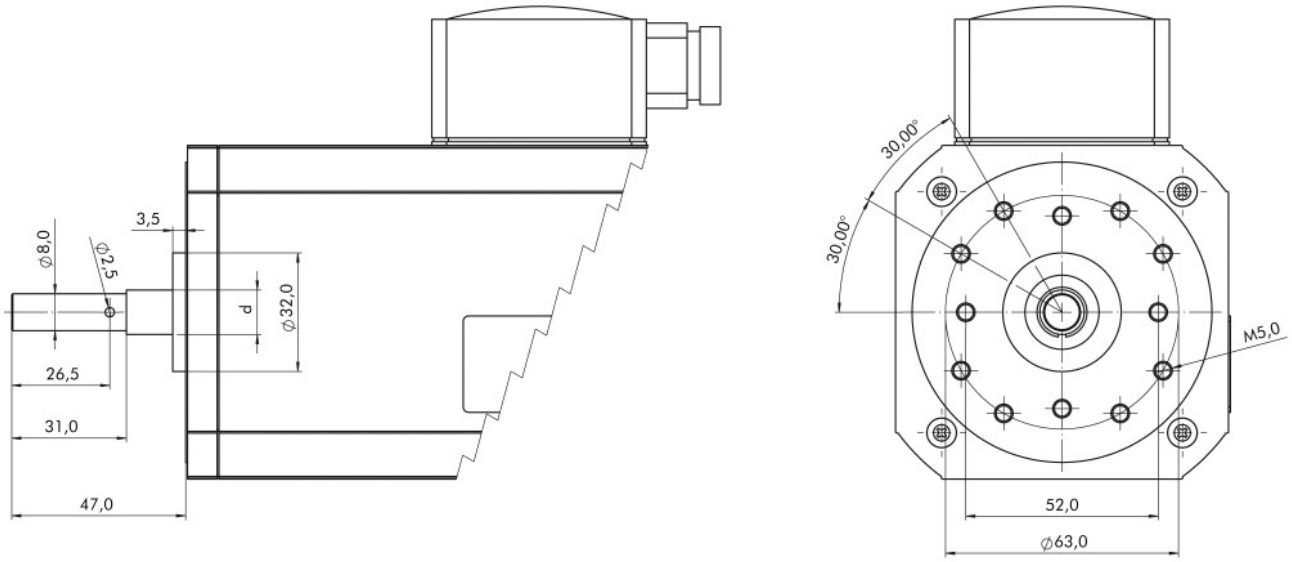

d [mm]	type IGK/IGKU
8	65
10	80/90
12	100

BRETZEL GmbH · Antriebs- und Elektrotechnik
Am Rotböll 8 · 64331 Weiterstadt · Telefax 0 61 50 / 8 65 60 - 69
www.bretzel-gmbh.de · info@bretzel-gmbh.de

optional brakes

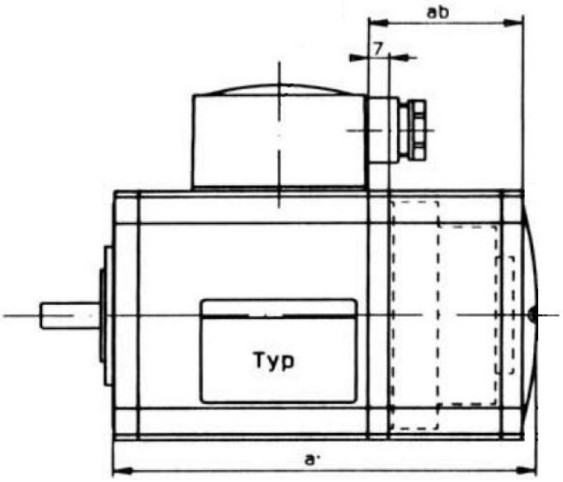

technical information (with spring-loaded brake)

type [IGK/-U]	braking torque [Nm]	voltage [VDC]	current [A]	dimension for a[2] B3 [mm]	dimension for a[2] B14 [mm]	for ab [mm]	mass [kg]
65-20	1,0	205	0,06	142	141,5	47	2,0
65-40				162	161,5		2,5
65-60				182	181,5		3,0
80-20	5,0		0,11	152	151,5	52	3,2
80-40				172	171,5		3,9
80-60				192	191,5		4,6
80-80				212	211,5		5,4
90-40	5,0		0,11	179,5	179		4,7
90-60				199,5	199		5,6
90-80				219,5	219		6,5
100-40	5,0		0,11	186,5	183		tbd
100-60				203,5	203		tbd
100-80				223,5	223		tbd

[2]data for 24 V DC, brakes only on request.

BRETZEL GmbH · Antriebs- und Elektrotechnik
Am Rotböll 8 · 64331 Weiterstadt · Telefax 0 61 50 / 8 65 60 - 69
www.bretzel-gmbh.de · info@bretzel-gmbh.de

available terminal boxes

K3/-E

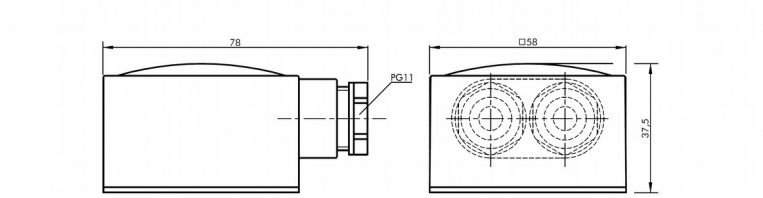

AK2

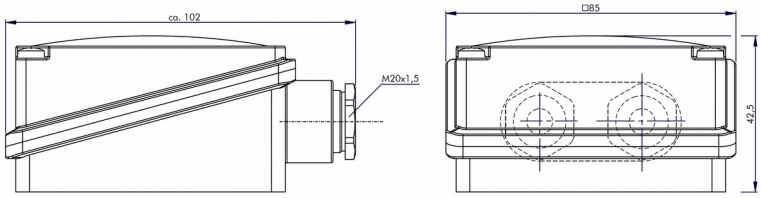

connections

design		type	3 phases	1 phase (Steinmetz-Schaltung)
standard motor	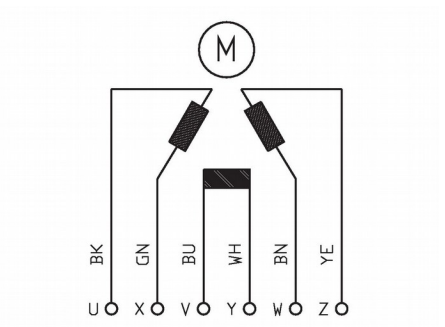	star	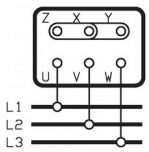	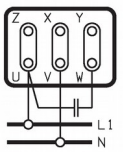
		triangle	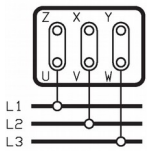	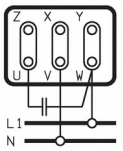
with brakes and commutator	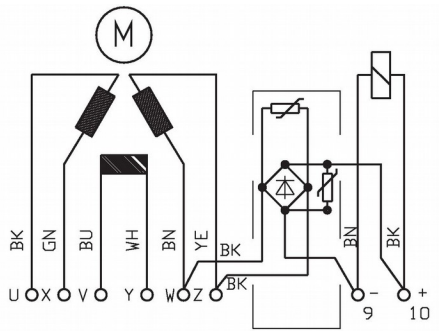	star	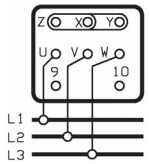	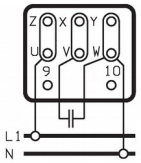
		triangle	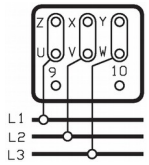	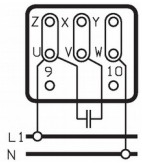

BRETZEL GmbH · Antriebs- und Elektrotechnik
Am Rotböll 8 · 64331 Weiterstadt · Telefax 0 61 50 / 8 65 60 - 69
www.bretzel-gmbh.de · info@bretzel-gmbh.de