Bearing-types for Groschopp AC- and DC- motors

SG 150 B3/B5

up to 15Nm

smooth compact-gearbox

Spur wheel gearbox

- Ball-bearing on output shaft
- ratios from 1,24:1 to 996:1 possible
- Mounting target of your choosing: flange- or base fastening possible
- high efficiency due to spur wheels

Certifications

CE

BRETZEL GmbH · Antriebs- und Elektrotechnik
Am Rotböll 8 · 64331 Weiterstadt · Telefax 0 61 50 / 8 65 60 - 69
www.bretzel-gmbh.de · info@bretzel-gmbh.de

Any questions concerning this product?
Please give us a call:
Telephone 0 61 50 / 8 65 60 - 0

drawings SG 150/B3

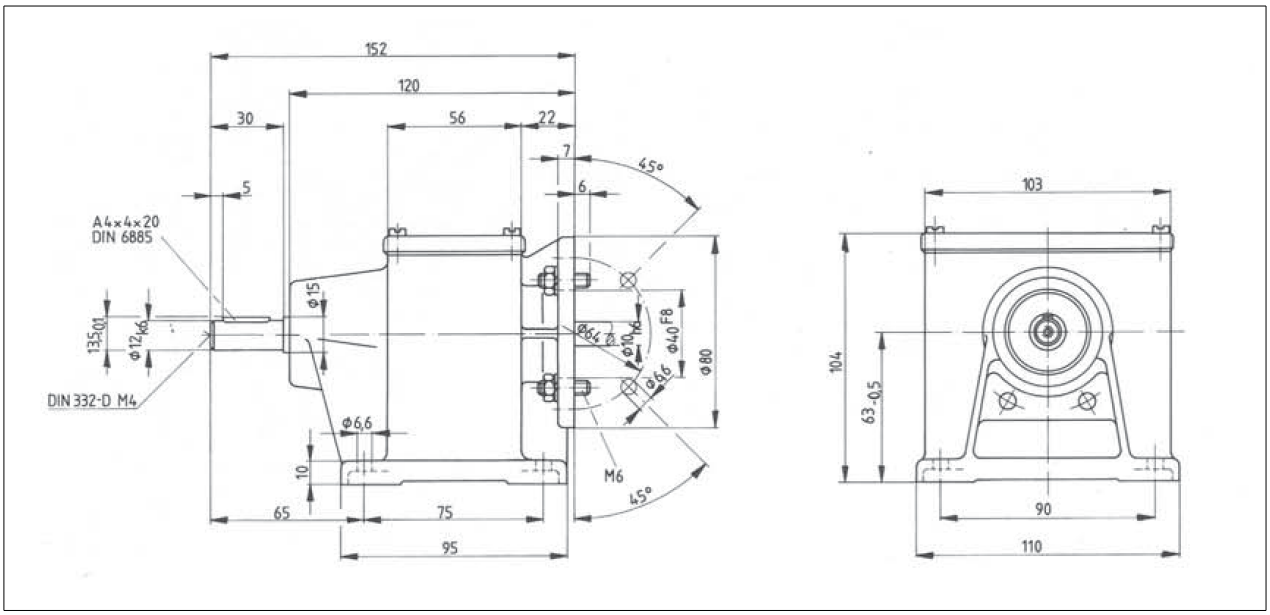

drawings SG 150/B5

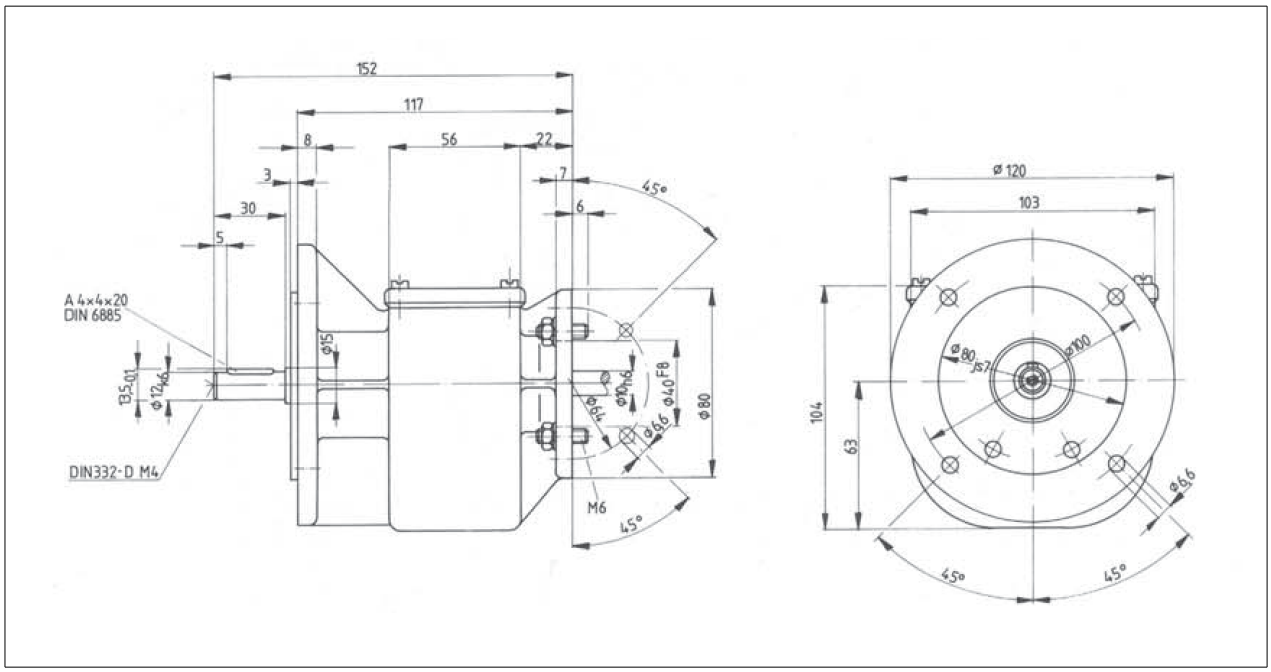

BRETZEL GmbH · Antriebs- und Elektrotechnik
Am Rotböll 8 · 64331 Weiterstadt · Telefax 0 61 50 / 8 65 60 - 69
www.bretzel-gmbh.de · info@bretzel-gmbh.de

Any questions concerning this product?
Please give us a call:
Telephone 0 61 50 / 8 65 60 - 0

available ratios

i =	1,24:1	1,6:1	2:1	2,5:1	3,2:1	4:1	5:1	6:1
	8:1	10:1	12:1	16:1	19:1	25:1	31:1	39:1
	50:1	62:1	77:1	100:1	124:1	157:1	198:1	249:1
	309:1	398:1	498:1	628:1	793:1	996:1		

technical data

ratios: i=	1,24:1/ 1,6:1/ 2:1/ 2,5:1/ 3,2:1/ 4:1/ 5:1/ 6:1/ 8:1/ 10:1/ 12:1/ 16:1 (2-stages)	19:1/ 25:1/ 31:1/ 39:1/ 50:1/ 62:1 (3-stages)	77:1/ 100:1/ 124:1/ 157:1/ 198:1/ 249:1 (4-stages)	309:1/ 398:1/ 498:1/ 628:1 793:1/ 996:1 (5-stages)
maximum output torque	1500 Ncm	1500 Ncm	1500 Ncm	1500 Ncm
direction of input and motorshaft	co-rotating	counter-rotating	co-rotating	counter-rotating
maximum load of drive shaft				
maximum radial load	300 N (at center of output shaft extension)	300 N (at center of output shaft extension)	300 N (at center of output shaft extension)	300 N (at center of output shaft extension)
maximum axial load	140 N	140 N	140 N	140 N
weight	B3=1,7 kg B5=1,85 kg	B3=1,7 kg B5=1,85 kg	B3=1,8 kg B5=1,95 kg	B3=1,9 kg B5=2,05 kg
material of spur wheels	all steel wheels	1. stage hard fiber-wheel (steel is also possible)	1. stage hard fiber-wheel (steel is also possible)	1. stage hard fiber-wheel (steel is also possible)

efficiency factor at n_{Mot} =1400 $^1/_m$

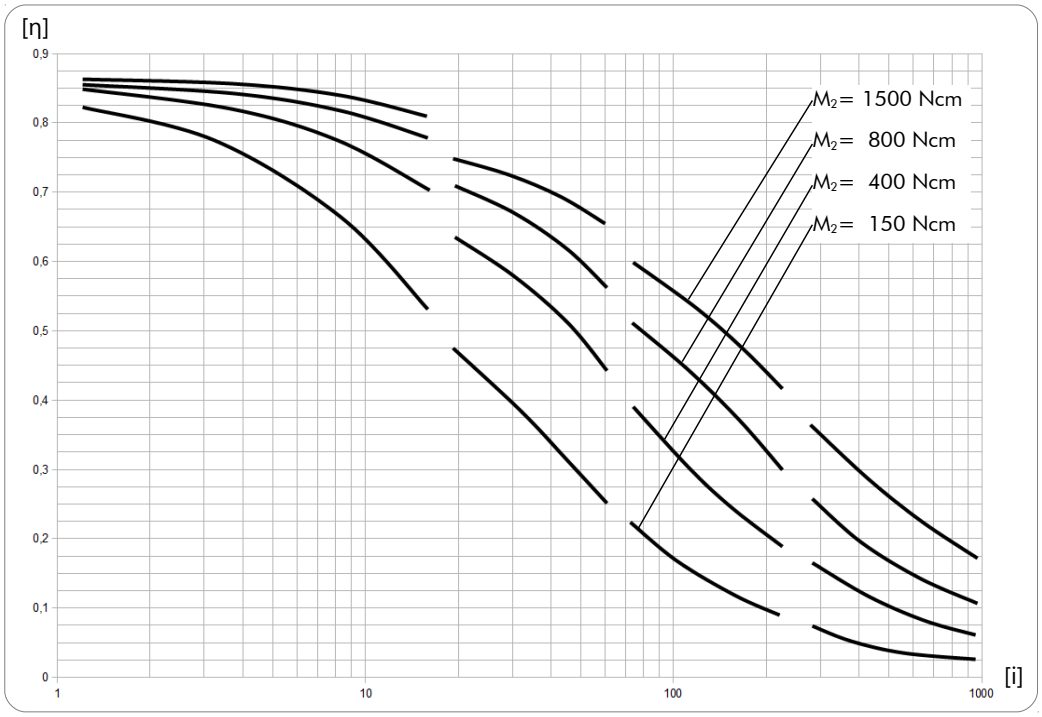

BRETZEL GmbH · Antriebs- und Elektrotechnik
Am Rotböll 8 · 64331 Weiterstadt · Telefax 0 61 50 / 8 65 60 - 69
www.bretzel-gmbh.de · info@bretzel-gmbh.de

Any questions concerning this product?
Please give us a call:
Telephone 0 61 50 / 8 65 60 - 0